HI-G® DRYER
SG MOTOR

Issued 31 May 10

Maintenance & Operation Manual

Derrick Corporation
590 Duke Road
Buffalo, New York 14225
Phone: 716.683.9010
Fax: 716.683.4991
www.derrickcorp.com

UNIT NUMBER IS KEY TO DERRICK SERVICE

All inquiries to Derrick must include the equipment unit number. The stainless steel unit number tag attached to each piece of Derrick equipment is your key to efficient service and support.

Typical Derrick Unit Number

This unique number gives vital information to Service personnel who use it to identify the correct parts when filling orders, provide accurate responses to service questions, track documentation, and trace the equipment's history or configuration. In short, the **unit number provides the critical information needed to ensure that Derrick customers receive the best possible service**.

The unit number consists of a two-character alphabetic prefix that identifies the equipment type and a series of numeric characters that signify the sequence of the machine's manufacture. For example, unit number MA000001 would be the first screening machine manufactured by Derrick. Alphabetic prefixes currently in use are:

MA - Screening Machine	AD - Desilter and Desander
DG - Degasser	AG - Mud Agitator
CF - Centrifuge	SF - Screen Frame

To ensure that it will remain intact over many years of rigorous service, the heavy-gage tag is riveted to a structural member such as the shaker support structure. It is not to be confused with any other identifier on the machine such as a vibrator motor serial number.

For convenient availability, the unit number is also recorded in the Operation and Maintenance manual shipped with the equipment. When contacting Derrick for any equipment question or need, always have the unit number in your possession. It's the best way to get the most efficient service from our dedicated Service and Engineering personnel.

ABOUT THIS MANUAL

This document is published in both printed and electronic form. In the electronic manual, all sections and paragraphs listed in the CONTENTS are linked to the corresponding text.

Navigate the electronic manual as follows:

1. **To view any desired information, display the CONTENTS page and move the cursor to the desired paragraph or section title.**

2. **To display the desired information, click on the listing when the pointing finger appears over the text.**

3. **When finished viewing the text, press Alt + left arrow key to return to the CONTENTS page.**

4. **If desired to return to the same information, press Alt + right arrow. To locate a different item, repeat steps 1 and 2.**

This document contains proprietary information of Derrick Corporation. It is intended solely for the information and use of parties operating and maintaining the equipment described herein. Such proprietary information may not be used, reproduced, or disclosed to any other parties for any other purpose without the expressed written permission of Derrick Corporation.

Continuous improvement is a policy of Derrick Corporation. All instructions and procedures are subject to change without notice.

CONTENTS

Section	Page	Date
1 - Introduction	**1-1**	**31 May 10**
Overview	1-1	
Safety	1-1	
Equipment Use	1-2	
Equipment Orientation	1-2	
Description	1-2	
Operation	1-2	
Major Components	1-2	
Product Support	1-6	
2 - Safety	**2-1**	**31 May 10**
Introduction	2-1	
Warnings	2-1	
Material Safety Data Sheets (MSDSs)	2-3	
3 - Installation	**3-1**	**31 May 10**
General	3-1	
Safety	3-1	
Installation Sequence	3-2	
Storage	3-2	
Site Preparation and Clearance Requirements	3-2	
Moving/Positioning the Equipment	3-3	
Hydrocyclone Cluster Installation	3-4	
Equipment Leveling	3-7	
Shipping Brackets	3-8	
Feed and Discharge Connections	3-9	
Electric Power Connections	3-9	
Screen Panel Installation	3-11	
Machine Startup	3-13	

CONTENTS

Section	Page	Date
4 - Operating Instructions	**4-1**	**31 May 10**
General	4-1	
Operating Safety	4-1	
Initial Startup	4-1	
Normal Startup	4-2	
Normal Shutdown	4-2	
Emergency Shutdown	4-2	
Desilter Operation	4-3	
Screen Frame Lifting Mechanism Operation	4-6	
Pool Configuration	4-8	
Screen Retention System Operation	4-9	
5 - Maintenance	**5-1**	**31 May 10**
General	5-1	
Routine Maintenance	5-1	
Screen Frame	5-2	
Vibrator Motors	5-4	
Screen Frame Lifting Mechanism Maintenance	5-4	
Screen Panel Replacement	5-5	
6 - Screen Retention System - Rapid Change Draw Bolt	**6-1**	**31 May 10**
General	6-1	
Description and Operation	6-1	
Screen Panel Replacement	6-2	
Inspection, Repair, and Parts Replacement	6-5	
7 - Vibrator Motor - SG	**7-1**	**31 May 10**
Description	7-1	
Repair Restrictions	7-2	
Safety	7-2	
Storage	7-3	
Operating Environment	7-3	
Replacement Parts	7-3	
Removal and Installation	7-5	
Electrical Connections	7-9	

Section	Page	Date
7 - Vibrator Motor (Cont'd)		
Preventive Maintenance	7-15	
Bearing Replacement	7-15	
Troubleshooting	7-24	
8 - Reference Drawings	**8-1**	**31 May 10**
9 - Installation and Maintenance Log	**9-1**	**30 Oct 09**

SECTION 1 - INTRODUCTION

OVERVIEW

This manual provides instructions for installing, operating, and maintaining the Derrick Hi-G Dryer®. The manual covers both the three-panel and four-panel machines (Figure 1-1). The manual is divided into several sections to assist the user in readily accessing the information.

Persons responsible for transporting, installing, operating, or performing maintenance on this equipment are required to read and understand the instructions provided in this manual. One copy of this manual should be available and accessible at the equipment location.

For maximum safety and performance, no additions and/or changes may be made to the equipment without the explicit written permission of Derrick Corporation. Genuine Derrick repair/replacement parts are required.

Figure 1-1 Typical Hi-G Dryer

SAFETY

Section 2 of this manual contains relevant safety information relating to both operation and maintenance of this equipment. Be sure this information is read and understood by all personnel.

DO NOT operate the equipment if defective or faulty mechanical or electrical components are detected.

EQUIPMENT USE

The Hi-G Dryer and associated components is designed expressly for removing solids from slurries. Derrick does not authorize any other use of this equipment. Intended usage of equipment includes compliance with the operating, maintenance, and safety instructions provided in this manual.

EQUIPMENT ORIENTATION

Throughout this manual, references to front, rear, left, and right are based on viewing the Hi-G Dryer from the feed end and looking toward the discharge end.

DESCRIPTION

The Hi-G Dryer is a dual-motor, high frequency, linear-motion vibrating screen machine designed for fine particle separation in the aggregate industry. The machine is available with either three or four screen panels and single or dual hydrocyclone desilters. The basic machine is configured with two Derrick SGX motors and manually operated screen frame lifting mechanism feature. To optimize the flow rate across the screening bed, the screen frame angle may be raised or lowered in response to changing slurry conditions.

A box feeder receives slurry from the collection pan beneath the 12-, 16-, or 20-way hydrocyclone cluster. The feeder promotes efficient screening by distributing the slurry evenly across the entire width of the screen frame. The hopper attached to the underside of the unit captures liquid underflow passing through the screen bed.

OPERATION

The wash plant discharge is fed under a consistent pressure of 35 to 37 psi to the 4” hydrocyclone radial cluster installed above a dewatering screen machine. The centrifugal separation process in the hydrocyclones extracts the ultra-fine sands and silts, discharging the materials through the underflow, which passes to the HI-G dewatering screen machine. The fines leaving the hydrocyclones are approximately 55 to 60 percent solids.

The two vibrator motors generate a 7.3 G acceleration on the screen surface. The vibrating screen efficiently separates water from the fine solids, resulting in a final dewatered discharge from the Hi-G Dryer containing 75 to 80 percent solids.

MAJOR COMPONENTS

The following paragraphs describes the major components and accessories of the Hi-G Dryer. Refer to Figure 1-2 for component locations.

The vibrator motors are attached directly to the screen frame and positioned over the screening bed to maximize the G-forces transferred to the screen surfaces. Float mounts isolate the vibratory motion of the screen frame from the support structure. Screening beds are slightly crowned to allow proper tensioning of the polyurethane screen surfaces. This method of screen tensioning improves screen performance and extends the life of the screen. The adjustable while drilling (AWD) mechanism is a manually operated jack screw that allows adjustment of the screen bed angle between -1° and +5°. This combination of features maximizes the fluid-handling and solids-removal capabilities of the machine.

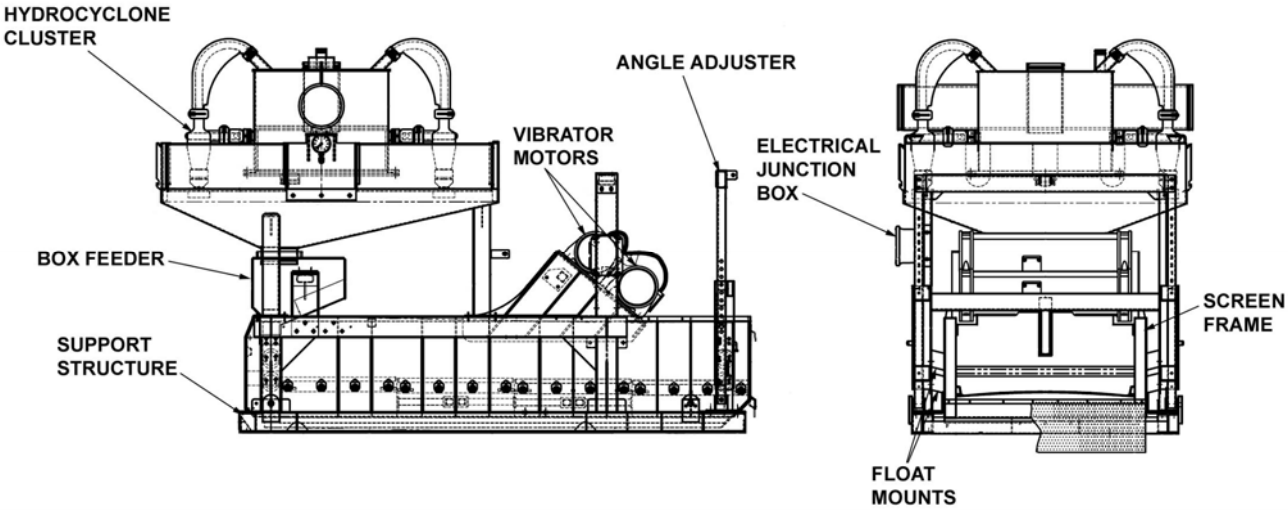

Figure 1-2 Hi-G Dryer Major Components

Screen Frame

The screen frame (Figure 1-3) is suspended between the vertical legs of the hopper assembly. The vibrating motion of the screen frame is isolated from the surrounding structural members by eight float mounts. The data plate with part number and serial number is installed on the side of the screen frame.

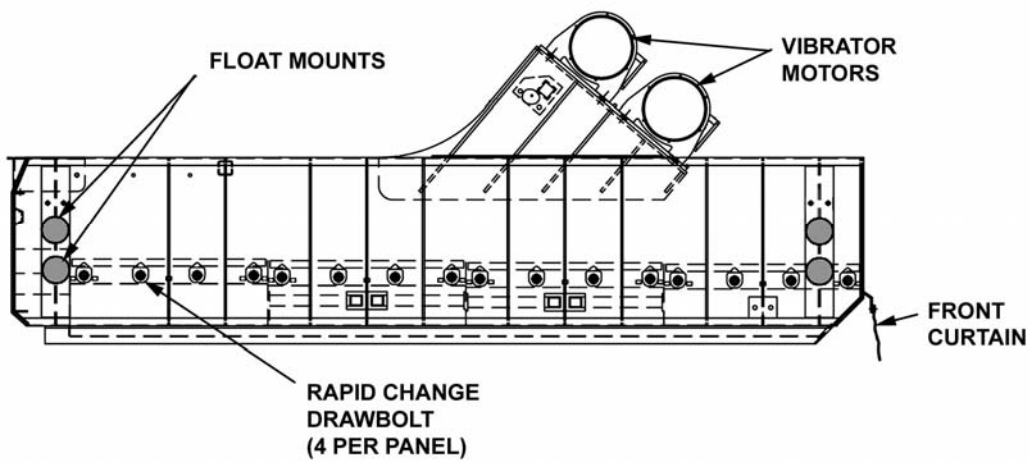

Figure 1-3 HI-G Dryer Screen Frame Components

Vibrator Motors

Two continuous-duty vibrator motors deliver 7Gs of force to the screen frame. Opposing electrical polarities cause the motors to rotate in opposite directions, thereby imparting linear vibrating motion to the screen frame for proper conveyance of solids toward the discharge end of the machine. The vibrating motion of the screen frame is isolated from the surrounding structural members by float mounts. Refer to Section 7 for additional information on the vibrator motors.

Support Structure

The support structure (Figure 1-4) contains mounting provisions for the feeder and electrical junction box. Fixed structural members at the feed end support the rear of the screen frame, while the angle adjuster supports the discharge end. This configuration permits adjustment of the screen frame angle by raising and lowering the discharge end of the screen frame. Refer to Section 4 for angle adjuster operating instructions. Lifting lugs are provided at the front and rear of the structure for lifting and positioning the equipment. In addition, the support structure has mounting provisions for the hydrocyclone cluster. The unit number identification tag is installed on the electrical junction box side of the support structure.

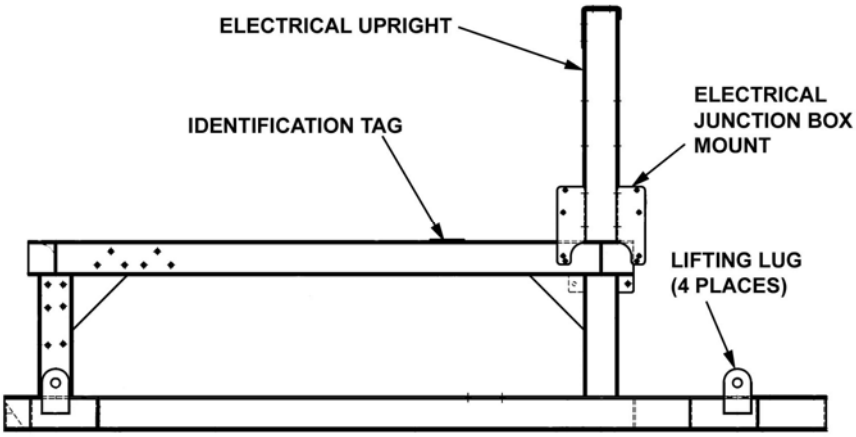

Figure 1-4 Support Structure and Hopper

Box Feeder

The box feeder (Figure 1-5) receives and distributes feed slurry evenly across the screen frame. The hydrocyclone cluster collection pan discharges directly into the feeder.

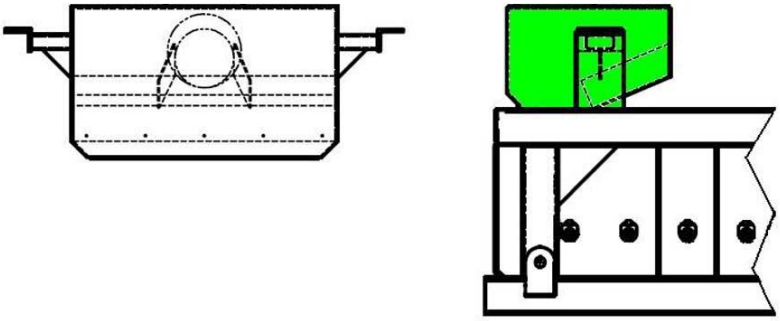

Figure 1-5 Box Feeder

Screen Frame Lifting Mechanism

The screen frame lifting mechanism allows the operator to extend the time that the feed slurry remains on the screening medium by elevating the discharge end of the screen frame. This additional time improves the separation of solids from the liquid.

By elevating the discharge end of the screen frame slightly, the lifting mechanism causes the slurry to pool toward the rear of the screen frame. This pooling allows the slurry to remain on the screen panels longer, permitting more liquid to drain through the panels and resulting in drier solids discharged from the screen frame.

Hydrocyclone

The 4” hydrocyclone removes 10- to 74-micron solids from slurry. The body is the main component of the 4” hydrocyclone (Figure 1-6). A cone tip is threaded into the bottom of the body. The soft apex is positioned in the tapered hole inside the triangular nut, which is threaded onto the cone tip.

By varying the apex opening, the hydrocyclone spray pattern may be adjusted during operation. Turning the orifice nut clockwise compresses the apex, thereby reducing the diameter of its opening. Turning the nut counterclockwise releases compression, allowing the apex to return to its original size.

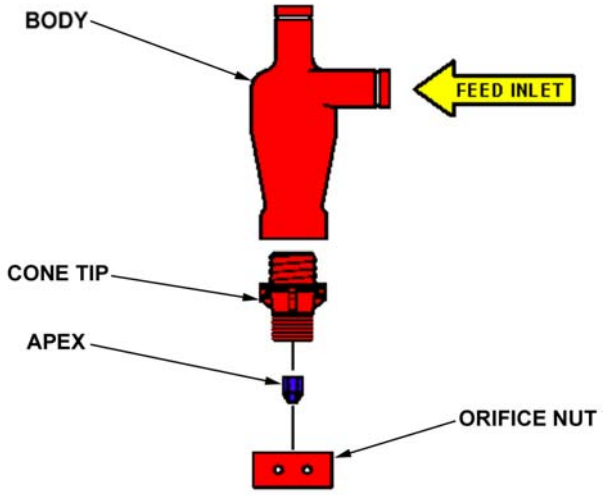

Figure 1-6 4” Hydrocyclone Components

PRODUCT SUPPORT

Derrick offers 24-hour per day, 7-day per week product support. Product support includes screen replacement / ordering information and repair / replacement parts and service for the entire product line. Refer to the following table for the parts / service center nearest you.

Contact	Telephone*	Facsimile (FAX)	E-Mail
Service Manager	716.683.9010	716.683.4991	sm@derrickcorp.com
Technical Service	716.683.9010	716.683.4991	techservice@derrickcorp.com
Parts Orders	716.683.9010	716.686.0677	orders@derrickcorp.com

* Toll-Free North America - 1.800.990.4362

SECTION 2 - SAFETY

INTRODUCTION

This section contains a summary of WARNINGS used in this manual and a list of material safety data sheets applicable to the equipment. The Hi-G Dryer has been designed to perform the stated functions safely.

WARNINGS

All persons responsible for operation and maintenance of this equipment must read and understand all safety information in this manual prior to operating and/or maintaining the equipment. The safety warnings listed below are included in applicable procedures throughout this manual.

Sound

⚠	**WARNING! TO PROTECT AGAINST HEARING LOSS, HEARING PROTECTION SHOULD BE WORN AT ALL TIMES WHEN WORKING ON OR NEAR DERRICK MACHINES.**

Electrical Hazards

⚠	**WARNING! TO AVOID SERIOUS PERSONAL INJURY BE SURE THAT EQUIPMENT IS DE-ENERGIZED, LOCKED OUT, AND TAGGED OUT PRIOR TO PERFORMING MAINTENANCE AND/OR ADJUSTMENTS.**
⚠	**WARNING! MOTOR MUST BE OPERATED AT THE DESIGNATED SUPPLY VOLTAGE.**
⚠	**WARNING! HIGH VOLTAGE MAY BE PRESENT. BE SURE THAT FUSED DISCONNECT SUPPLYING ELECTRIC POWER TO THIS EQUIPMENT IS OPEN. LOCK OUT AND TAG OUT POWER SUPPLY TO PREVENT ACCIDENTAL APPLICATION OF POWER WHILE MAINTENANCE AND/OR ADJUSTMENTS ARE IN PROGRESS.**
⚠	**WARNING! ELECTRICAL CONNECTIONS MUST BE MADE IN ACCORDANCE WITH THE NATIONAL ELECTRICAL CODE (NEC) AND ALL APPLICABLE LOCAL CODES. FAILURE TO COMPLY MAY RESULT IN AN UNSAFE CONDITION THAT COULD INJURE PERSONNEL AND/OR DAMAGE EQUIPMENT. ENSURE THAT ALL ELECTRICAL AND CONDUIT CONNECTIONS ARE SECURE.**

Equipment Handling

⚠	**WARNING! USE SPREADER BARS TO PREVENT DAMAGE WHEN LIFTING THE EQUIPMENT.**
⚠	**WARNING! TO ENSURE PROPER BALANCE AND ORIENTATION WHEN UNIT IS RAISED AND PREVENT DAMAGE TO COMPONENTS, ATTACH LIFTING SLING ONLY AT DESIGNATED LIFT POINTS. DO NOT ATTEMPT LIFTING BY ATTACHMENT TO MOTOR OR ANY OTHER LOCATION.**
⚠	**WARNING! BE SURE THAT HANDLING DEVICES HAVE SUFFICIENT LIFTING CAPACITY TO SAFELY HANDLE THE WEIGHT OF THE EQUIPMENT.**
⚠	**WARNING! DO NOT REMOVE SHIPPING BRACKETS UNTIL EQUIPMENT HAS BEEN POSITIONED AT FINAL INSTALLATION SITE.**

Operation

⚠	**WARNING! MOTOR HOUSING BECOMES HOT DURING OPERATION AND MAY CAUSE SEVERE BURNS. DO NOT TOUCH MOTOR HOUSING DURING OR IMMEDIATELY AFTER MOTOR HAS BEEN OPERATING.**
⚠	**WARNING! ALL OPERATING AND MAINTENANCE PERSONNEL MUST READ AND UNDERSTAND ALL SAFETY INFORMATION IN THIS MANUAL BEFORE WORKING WITH THE EQUIPMENT.**
⚠	**WARNING! BE SURE THAT ALL PERSONNEL ARE CLEAR OF MACHINE BEFORE ADJUSTING ANGLE OF SCREEN BED. HANDS AND FEET CAN BE CRUSHED BY THE MOVING SCREEN FRAME.**
⚠	**WARNING! DO NOT ATTEMPT TO OPERATE EQUIPMENT WITH SHIPPING BRACKETS INSTALLED.**

Maintenance

⚠	**WARNING! HIGH VOLTAGE MAY BE PRESENT. ALWAYS OPEN FUSED DISCONNECT SUPPLYING ELECTRIC POWER TO THE EQUIPMENT, AND LOCK OUT AND TAG OUT POWER SUPPLY BEFORE PERFORMING ANY MAINTENANCE AND/OR ADJUSTMENTS OF EQUIPMENT.**

Storage

⚠	**WARNING! MOTOR MAY BE DAMAGED BY STORING IN A HIGH HUMIDITY ENVIRONMENT (GREATER THAN 50% RH). OUT-OF-SERVICE MOTOR(S) MUST BE STORED IN A LOW-HUMIDITY ENVIRONMENT.**

MATERIAL SAFETY DATA SHEETS (MSDSs)

Material Safety Data Sheets (MSDSs) for exterior finish products are included in this section to advise personnel of the properties and any possible hazards associated with these materials. Emergency first aid procedures, special precautions, emergency telephone number, and other relevant data are contained in the MSDSs. These documents were prepared by the product manufacturers, which have sole responsibility for accuracy of the information.

The MSDSs included are current as of the publication date of this manual and are supplied only for reference. It is the customer's responsibility to contact the product manufacturer for the latest documents.

In addition to the finish product documents, MSDSs, are listed for other products used in the equipment. To ensure that current information is available, the MSDS should be obtained for the product at the time of purchase. Please note that equivalent products for the listed materials are approved by Derrick for the corresponding applications.

MATERIAL DESCRIPTION - WHERE USED	MSDS No. / Date
Paints and Coatings	
Devoe DEVTHANE 359 - Top Coat	*DEVTHANE 359* / 05-06-08
Devoe CATHACOAT 302H - Prime Coat	*CATHACOAT 302H* / 08-11-06
Sundur Beige Polyester TGIC - Vibrator Motor	*P-1609* / 10-30-02
Lubricants and Sealants	
Exxon Mobil Mobilith SHC-100 - Vibrator Motor Bearings	*
Loctite 76764 Anti-Seize Lubricant - Fasteners	*

* MSDS not included; contact manufacturer for latest revision.

MATERIAL SAFETY DATA SHEET

prepared 05/06/08

HAZARDS IDENTIFICATION (ANSI Section 3)

Primary route(s) of exposure : Inhalation, skin contact, eye contact, ingestion.

Effects of overexposure :

Inhalation : Irritation of respiratory tract. Prolonged inhalation may lead to. Inhalation of spray mist may cause irritation of respiratory tract. Mucous membrane irritation, fatigue, drowsiness, dizziness and/or lightheadedness, headache, uncoordination, nausea, vomiting, abdominal pain, chest pain, coughing, apathy, central nervous system depression, intoxication, anesthetic effect or narcosis, difficulty of breathing, allergic response, tremors, severe lung irritation or damage, pulmonary edema, pneumoconiosis, loss of consciousness, respiratory failure, death. Possible sensitization to respiratory tract.

Skin contact : Irritation of skin. Prolonged or repeated contact can cause dermatitis, defatting, severe skin irritation. Possible sensitization to skin.

Eye contact : Irritation of eyes. Prolonged or repeated contact can cause conjunctivitis, blurred vision, tearing of eyes, redness of eyes, severe eye irritation, corneal injury.

Ingestion : Ingestion may cause lung inflammation and damage due to aspiration of material into lungs, mouth and throat irritation, drowsiness, dizziness and/or lightheadedness, headache, uncoordination, nausea, vomiting, diarrhea, gastro-intestinal disturbances, abdominal pain, visual disturbances, apathy, central nervous system depression, intoxication, anesthetic effect or narcosis, burns of the mouth, throat, stomach, pulmonary edema, loss of consciousness, respiratory failure, death.

Medical conditions aggravated by exposure : Eye, skin, respiratory disorders, kidney disorders, liver disorders, nervous system disorders, respiratory disorders.

FIRST-AID MEASURES (ANSI Section 4)

Inhalation : Remove to fresh air. Restore and support continued breathing. Get emergency medical attention. Have trained person give oxygen if necessary. Get medical help for any breathing difficulty. Remove to fresh air if inhalation causes eye watering, headaches, dizziness, or other discomfort.

Skin contact : Wash thoroughly with soap and water. If any product remains, gently rub petroleum jelly, vegetable or mineral/baby oil onto skin. Repeated applications may be needed. Remove contaminated clothing. Wash contaminated clothing before re-use. Dispose of contaminated leather items, such as shoes and belts. If irritation occurs, consult a physician.

Eye contact : Flush immediately with large amounts of water, especially under lids for at least 15 minutes. If irritation or other effects persist, obtain medical treatment.

Ingestion : If swallowed, obtain medical treatment immediately.

FIRE-FIGHTING MEASURES (ANSI Section 5)

Fire extinguishing media : Dry chemical or foam water fog. Carbon dioxide. Closed containers may explode when exposed to extreme heat or fire. Vapors may ignite explosively at ambient temperatures. Vapors are heavier than air and may travel long distances to a source of ignition and flash back. Vapors can form explosive mixtures in air at elevated temperatures. Closed containers may burst if exposed to extreme heat or fire. Dust explosion hazard. May decompose under fire conditions emitting irritant and/or toxic gases.

Fire fighting procedures : Water may be used to cool and protect exposed containers. Firefighters should use full protective clothing, eye protection, and self-contained breathing apparatus. Self-contained breathing apparatus recommended.

Hazardous decomposition or combustion products : Carbon monoxide, carbon dioxide, oxides of nitrogen, oxides of sulfur, ammonia, hydrogen chloride, toxic gases, barium compounds. Cyanides.

ACCIDENTAL RELEASE MEASURES (ANSI Section 6)

Steps to be taken in case material is released or spilled : Comply with all applicable health and environmental regulations. Eliminate all sources of ignition. Ventilate area. Ventilate area with explosion-proof equipment. Spills may be collected with absorbent materials. Use non-sparking tools. Evacuate all unnecessary personnel. Place collected material in proper container. Complete personal protective equipment must be used during cleanup. Large spills - shut off leak if safe to do so. Dike and contain spill. Pump to storage or salvage vessels. Use absorbent to pick up excess residue. Keep salvageable material and rinse water out of sewers and water courses. Small spills - use absorbent to pick up residue and dispose of properly.

HANDLING AND STORAGE (ANSI Section 7)

Handling and storage : Store below 80f. Store below 100f (38c). Keep away from heat, sparks and open flame. Store in original container. Keep away from direct sunlight, heat and all sources of ignition. Keep container tightly closed in a well-ventilated area.

Other precautions : Use only with adequate ventilation. Do not take internally. Keep out of reach of children. Avoid contact with skin and eyes, and breathing of vapors. Wash hands thoroughly after handling, especially before eating or smoking. Keep containers tightly closed and upright when not in use. Empty containers may contain hazardous residues. Ground equipment when transferring to prevent accumulation of static charge.

EXPOSURE CONTROLS/PERSONAL PROTECTION (ANSI Section 8)

Respiratory protection : Respiratory protection is required for use in isocyanate containing environments. Consider type of application and environmental concentrations when selecting respiratory protection. Observe governmental regulations for respirator use. (29 CFR 1910.134(OSHA))(Canadian z94.4) The use of positive pressure supplied air respirator is mandatory when the airborne isocyanate concentrations are not known. Note: isocyanate based materials have been determined to cause allergic sensitization in humans. Avoid inhalation and dermal (skin) contact with the uncured material.

Ventilation : Provide dilution ventilation or local exhaust to prevent build-up of vapors. Use explosion-proof equipment. Use non-sparking equipment.

Personal protective equipment : Eye wash, safety shower, safety glasses or goggles. Impervious gloves, impervious clothing, face shield, apron, boots.

STABILITY AND REACTIVITY (ANSI Section 10)

Under normal conditions : Stable see section 5 fire fighting measures

Materials to avoid : Oxidizers, acids, reducing agents, bases, aldehydes, halogens, amines, alkalis, water, peroxides, nitric acid, alcohols, combustible materials, caustics, mineral acids. Nitrates.

Conditions to avoid : Sunlight, elevated temperatures, moisture, contact with oxidizing agent, storage near acids, sparks, open flame, ignition sources.

Hazardous polymerization : Will not occur

The information contained herein is based on data available at the time of preparation of this data sheet which ICI Paints believes to be reliable. However, no warranty is expressed or implied regarding the accuracy of this data. ICI Paints shall not be responsible for the use of this information, or of any product, method or apparatus mentioned and you must make your own determination of its suitability and completeness for your own use, for the protection of the environment, and the health and safety of your employees and the users of this material.
Complies with OSHA hazard communication standard 29CFR1910.1200.

ICI Paints North America 15885 Sprague Road Strongsville, Ohio 44136 EMERGENCY TELEPHONE NO. (800) 545-2643

TOXICOLOGICAL INFORMATION (ANSI Section 11)

Supplemental health information : Contains a chemical that is moderately toxic by ingestion. Contains a chemical that is toxic by inhalation. Contains a chemical that may be absorbed through skin. Free diisocyanate may cause allergic reaction in susceptible persons. Notice - reports have associated repeated and prolonged occupational overexposure to solvents with permanent brain and nervous system damage. Intentional misuse by deliberately concentrating and inhaling the contents may be harmful or fatal. Contains iron oxide, repeated or prolonged exposure to iron oxide dust may cause siderosis, a benign pneumoconiosis. Other effects of overexposure may include toxicity to liver, kidney, central nervous system, blood.

Carcinogenicity : Contains formaldehyde, a potential cancer hazard. Rats exposed to formaldehyde via inhalation developed cancer of the nasal cavity. Evidence in humans is limited (nasal and nasopharyngeal cancer). Formaldehyde is listed as a carcinogen by OSHA, probable human carcinogen (group 2a) by IARC, and anticipated human carcinogen by NTP. Overexposure can cause eye, skin, and respiratory tract irritation, and skin and respiratory sensitization. In a lifetime inhalation study, exposure to 250 mg/m3 titanium dioxide resulted in the development of lung tumors in rats. These tumors occurred only at dust levels that overwhelmed the animals' lung clearance mechanisms and were different from common human lung tumors in both type and location. The relevance of these findings to humans is unknown but questionable. The international agency for research on cancer (IARC) has classified titanium dioxide as possibly carcinogenic to humans (group 2b) based on inadequate evidence of carcinogenicity in humans and sufficient evidence of carcinogenicity in experimental animals.

Reproductive effects : High exposures to xylene in some animal studies, often at maternally toxic levels, have affected embryo/fetal development. The significance of this finding to humans is not known.

Mutagenicity : No mutagenic effects are anticipated

Teratogenicity : No teratogenic effects are anticipated

ECOLOGICAL INFORMATION (ANSI Section 12)

No ecological testing has been done by ICI paints on this product as a whole.

DISPOSAL CONSIDERATIONS (ANSI Section 13)

Waste disposal : Dispose in accordance with all applicable regulations. Avoid discharge to natural waters.

REGULATORY INFORMATION (ANSI Section 15)

As of the date of this MSDS, all of the components in this product are listed (or are otherwise exempt from listing) on the TSCA inventory. This product has been classified in accordance with the hazard criteria of the CPR (controlled products regulations) and the MSDS contains all the information required by the CPR.

Physical Data (ANSI Sections 1, 9, and 14)

Product Code	Description	Wt. / Gal.	VOC gr. / ltr.	% Volatile by Volume	Flash Point	Boiling Range	HMIS	DOT, proper shipping name
359F65DGF	devthane 359h (no organic haps) derrick green	9.02	291.43	34.96	80 f	208-595	*330	UN1263, paint, 3, PGIII
379C0910	devthane 379 hs converter	9.40	112.85	13.00	135 f	293-293	*321	UN1866, resin solution, combustible liquid, PGIII

Ingredients Product Codes with % by Weight (ANSI Section 2)

Chemical Name	Common Name	CAS. No.	359F65DGF	379C0910
4-heptanone, 2,6-dimethyl-	diisobutyl ketone	108-83-8	1-5	
ethane, 1,1',1''-methylidenetris(oxy)-tris-	ethyl orthoformate	122-51-0	1-5	
acetic acid, butyl ester	butyl acetate	123-86-4	5-10	5-10
c.i. pigment green 7	phthalo green pigment	1328-53-6	1-5	
benzene, dimethyl-	xylene	1330-20-7	.1-1.0	.1-1.0
titanium oxide	titanium dioxide	13463-67-7	1-5	
2-propenoic acid, 2-methyl-, 2-hydroxyethyl ester, polymer with ethenylbenzene, 2-ethylhexyl 2-propeno and methyl 2-methyl-2-propenoate	acrylic polymer	26916-05-2	40-50	
hexane, 1,6-diisocyanato-, homopolymer	aliphatic polyisocyanate	28182-81-2		90-95
formaldehyde	formaldehyde	50-00-0	LT .01	
c.i. pigment yellow 42	yellow iron oxide	51274-00-1	1-5	
acetic acid, 1,1-dimethylethyl ester	tert-butyl acetate	540-88-5	1-5	
butanamide, 2-((2-methoxy-4-nitrophenyl)azo) -n-(2-methoxyphenyl)-3-oxo-	pigment yellow 74	6358-31-2	1-5	
solvent naphtha (petroleum), light aromatic	light aromatic solvent naphtha	64742-95-6		1-5
1-butanol	n-butanol	71-36-3	1-5	
propanoic acid, 3-ethoxy-, ethyl ester	ethyl 3-ethoxypropionate	763-69-9	5-10	
sulfuric acid, barium salt	barium sulfate	7727-43-7	1-5	
castor oil	castor oil, raw	8001-79-4	10-20	
hexane, 1,6-diisocyanato-	hexamethylene diisocyanate	822-06-0		.1-1.0
acetic acid, c6-8-branched alkyl esters	oxo-heptyl acetate	90438-79-2	1-5	
benzene,1,2,4-trimethyl-	pseudocumene	95-63-6	.1-1.0	1-5
anti-settling agent	anti-settling agent	Sup. Conf.	1-5	
polyamide	rheological additive	Sup. Conf.	1-5	

Chemical Hazard Data (ANSI Sections 2, 8, 11, and 15)

		ACGIH-TLV				OSHA-PEL				S.R. Std.	S2	S3	CC					
Common Name	CAS. No.	8-Hour TWA	STEL	C	S	8-Hour TWA	STEL	C	S					H	M	N	I	O
diisobutyl ketone	108-83-8	25 ppm	not est.	not est.	not est.	50 ppm	not est.	not est.	not est.	not est.	n	n	n	n	n	n	n	n
ethyl orthoformate	122-51-0	not est.	not est.	not est.	not est.	not est.	not est.	not est.	not est.	not est.	n	n	n	n	n	n	n	n
butyl acetate	123-86-4	150 ppm	200 ppm	not est.	not est.	150 ppm	not est.	not est.	not est.	not est.	n	n	y	n	n	n	n	n
phthalo green pigment	1328-53-6	not est.	not est.	not est.	not est.	not est.	not est.	not est.	not est.	not est.	n	n	n	n	n	n	n	n
xylene	1330-20-7	100 ppm	150 ppm	not est.	not est.	100 ppm	not est.	not est.	not est.	not est.	n	y	y	y	n	n	n	n
titanium dioxide	13463-67-7	10 mg/m3	not est.	not est.	not est.	10 mg/m3	not est.	not est.	not est.	not est.	n	n	n	n	n	y	y	n
acrylic polymer	26916-05-2	not est.	not est.	not est.	not est.	not est.	not est.	not est.	not est.	not est.	n	n	n	n	n	n	n	n
aliphatic polyisocyanate	28182-81-2	not est.	not est.	not est.	not est.	not est.	not est.	not est.	not est.	not est.	n	n	n	n	n	n	n	n
formaldehyde	50-00-0	not est.	not est.	0.3 ppm	not est.	0.75 ppm	2 ppm	not est.	not est.	not est.	y	y	y	y	n	y	y	y
yellow iron oxide	51274-00-1	5 mg/m3	not est.	not est.	not est.	10 mg/m3	not est.	not est.	not est.	not est.	n	n	n	n	n	n	n	n
tert-butyl acetate	540-88-5	200 ppm	not est.	not est.	not est.	200 ppm	not est.	not est.	not est.	not est.	n	n	y	n	n	n	n	n
pigment yellow 74	6358-31-2	not est.	not est.	not est.	not est.	not est.	not est.	not est.	not est.	not est.	n	n	n	n	n	n	n	n
light aromatic solvent naphtha	64742-95-6	not est.	not est.	not est.	not est.	500x ppm	not est.	not est.	not est.	not est.	n	n	n	n	n	n	n	n
n-butanol	71-36-3	20 ppm	not est.	not est.	not est.	100 ppm	not est.	not est.	not est.	not est.	n	y	y	n	n	n	n	n
ethyl 3-ethoxypropionate	763-69-9	not est.	not est.	not est.	not est.	not est.	not est.	not est.	not est.	not est.	n	n	n	n	n	n	n	n
barium sulfate	7727-43-7	10 mg/m3	not est.	not est.	not est.	5 mg/m3	not est.	not est.	not est.	not est.	n	n	n	n	n	n	n	n
castor oil, raw	8001-79-4	not est.	not est.	not est.	not est.	not est.	not est.	not est.	not est.	not est.	n	n	n	n	n	n	n	n
hexamethylene diisocyanate	822-06-0	0.005 ppm	not est.	not est.	not est.	not est.	not est.	not est.	not est.	not est.	n	y	y	y	n	n	n	n
oxo-heptyl acetate	90438-79-2	not est.	not est.	not est.	not est.	not est.	not est.	not est.	not est.	not est.	n	n	n	n	n	n	n	n
pseudocumene	95-63-6	25 ppm	not est.	not est.	not est.	not est.	not est.	not est.	not est.	not est.	n	y	n	n	n	n	n	n
anti-settling agent	Sup. Conf.	not est.	not est.	not est.	not est.	not est.	not est.	not est.	not est.	not est.	n	n	n	n	n	n	n	n
rheological additive	Sup. Conf.	10 mg/m3	not est.	not est.	not est.	5 mg/m3	not est.	not est.	not est.	not est.	n	n	n	n	n	n	n	n

Footnotes:

C=Ceiling - Concentration that should not be exceeded, even instantaneously.

S=Skin - Additional exposure, over and above airborn exposure, may result from skin absorption.

n/a=not applicable
not est=not established
CC=CERCLA Chemical

ppm=parts per million
mg/m3=milligrams per cubic meter
Sup Conf=Supplier Confidential

S2=Sara Section 302 EHS
S3=Sara Section 313 Chemical
S.R.Std.=Supplier Recommended Standard

H=Hazardous Air Pollutant, M=Marine Pollutant
P=Pollutant, S=Severe Pollutant
Carcinogenicity Listed By:
N=NTP, I=IARC, O=OSHA, y=yes, n=no

MATERIAL SAFETY DATA SHEET prepared 08/11/06

HAZARDS IDENTIFICATION (ANSI Section 3)

Primary route(s) of exposure : Inhalation, skin contact, eye contact, ingestion.

Effects of overexposure :

Inhalation : Irritation of respiratory tract. Prolonged inhalation may lead to mucous membrane irritation, fatigue, drowsiness, dizziness and/or lightheadedness, headache, uncoordination, nausea, vomiting, diarrhea, abdominal pain, chest pain, flu-like symptoms, coughing, sneezing, apathy, central nervous system depression, anesthetic effect or narcosis, difficulty of breathing, allergic response, bronchitis, fever and chills, abnormal blood pressure, severe lung irritation or damage, pulmonary edema, pneumoconiosis, loss of consciousness, respiratory failure, death. Possible sensitization to respiratory tract.

Skin contact : Irritation of skin. Prolonged or repeated contact can cause dermatitis, defatting, allergic response, severe skin irritation, severe skin irritation or burns. Possible sensitization to skin.

Eye contact : Irritation of eyes. Prolonged or repeated contact can cause conjunctivitis, tearing of eyes, redness of eyes, severe eye irritation, severe eye irritation or burns, corneal injury.

Ingestion : Ingestion may cause lung inflammation and damage due to aspiration of material into lungs, mouth and throat irritation, drowsiness, dizziness and/or lightheadedness, headache, uncoordination, nausea, vomiting, diarrhea, gastro-intestinal disturbances, abdominal pain, visual disturbances, apathy, central nervous system depression, anesthetic effect or narcosis, burns of the mouth, throat, stomach, kidney damage, loss of consciousness, respiratory failure, death.

Medical conditions aggravated by exposure : Eye, skin, respiratory disorders, lung disorders, asthma-like conditions, allergies.

FIRST-AID MEASURES (ANSI Section 4)

Inhalation : Remove to fresh air. Restore and support continued breathing. Get emergency medical attention. Have trained person give oxygen if necessary. Get medical help for any breathing difficulty.

Skin contact : Wash thoroughly with soap and water. If any product remains, gently rub petroleum jelly, vegetable or mineral/baby oil onto skin. Repeated applications may be needed. Remove contaminated clothing. Wash contaminated clothing before re-use. Dispose of contaminated leather items, such as shoes and belts. If irritation occurs, consult a physician.

Eye contact : Flush immediately with large amounts of water, especially under lids for at least 15 minutes. If irritation or other effects persist, obtain medical treatment.

Ingestion : If swallowed, obtain medical treatment immediately.

FIRE-FIGHTING MEASURES (ANSI Section 5)

Fire extinguishing media : Dry chemical or foam water fog. Carbon dioxide. Closed containers may explode when exposed to extreme heat or fire. Vapors may ignite explosively at ambient temperatures. Vapors are heavier than air and may travel long distances to a source of ignition and flash back. Closed containers may burst if exposed to extreme heat or fire. May decompose under fire conditions emitting irritant and/or toxic gases.

Fire fighting procedures : Water may be used to cool and protect exposed containers. Firefighters should use full protective clothing, eye protection, and self-contained breathing apparatus. Self-contained breathing apparatus recommended.

Hazardous decomposition or combustion products : Carbon monoxide, carbon dioxide, oxides of nitrogen, acrid fumes, oxides of sulfur, ammonia, aldehydes, toxic gases, barium compounds. Phenolics cyanides.

ACCIDENTAL RELEASE MEASURES (ANSI Section 6)

Steps to be taken in case material is released or spilled : Comply with all applicable health and environmental regulations. Eliminate all sources of ignition. Ventilate area. Ventilate area with explosion-proof equipment. Spills may be collected with absorbent materials. Use non-sparking tools. Evacuate all unnecessary personnel. Place collected material in proper container. Complete personal protective equipment must be used during cleanup. Large spills - shut off leak if safe to do so. Dike and contain spill. Pump to storage or salvage vessels. Use absorbent to pick up excess residue. Keep salvageable material and rinse water out of sewers and water courses. Small spills - use absorbent to pick up residue and dispose of properly.

HANDLING AND STORAGE (ANSI Section 7)

Handling and storage : Store below 80f. Keep away from heat, sparks and open flame. Keep away from direct sunlight, heat and all sources of ignition.

Other precautions : Use only with adequate ventilation. Do not take internally. Keep out of reach of children. Avoid contact with skin and eyes, and breathing of vapors. Wash hands thoroughly after handling, especially before eating or smoking. Keep containers tightly closed and upright when not in use. Empty containers may contain hazardous residues. Ground equipment when transferring to prevent accumulation of static charge.

EXPOSURE CONTROLS/PERSONAL PROTECTION (ANSI Section 8)

Respiratory protection : Where respiratory protection is required, use only NIOSH/ MSHA approved respirators in accordance with OSHA standard 29 CFR 1910.134.

Ventilation : Provide dilution ventilation or local exhaust to prevent build-up of vapors. Use explosion-proof equipment. Use non-sparking equipment.

Personal protective equipment : Eye wash, safety shower, safety glasses or goggles. Impervious gloves, impervious clothing, face shield, apron.

STABILITY AND REACTIVITY (ANSI Section 10)

Under normal conditions : Stable see section 5 fire fighting measures

Materials to avoid : Oxidizers, acids, reducing agents, bases, aldehydes, ketones, halogens, amines, carbon tetrachloride (at elevated temperatures), aluminum, metal compounds, combustible materials, magnesium, lewis acids, mineral acids.

Conditions to avoid : Elevated temperatures, moisture, contact with oxidizing agent, high concentration of dust, storage near acids, sparks, open flame, ignition sources.

Hazardous polymerization : Will not occur may polymerize in presence of aliphatic amines.

TOXICOLOGICAL INFORMATION (ANSI Section 11)

Supplemental health information : Contains a chemical that is moderately toxic by ingestion. Contains a chemical that may be absorbed through skin. Excessive inhalation of fumes may lead to metal fume fever characterized by a metallic taste in mouth, excessive thirst, coughing, weakness, fatigue, muscular pain, nausea, chills and fever. Notice - reports have associated repeated and prolonged occupational overexposure to solvents with permanent brain and nervous system damage. Intentional misuse by deliberately concentrating and inhaling the contents may be harmful or fatal. Contains iron oxide, repeated or prolonged exposure to iron oxide dust may cause siderosis, a benign pneumoconiosis. Other effects of overexposure may include toxicity to liver, kidney, central nervous system, blood.

The information contained herein is based on data available at the time of preparation of this data sheet which ICI Paints believes to be reliable. However, no warranty is expressed or implied regarding the accuracy of this data. ICI Paints shall not be responsible for the use of this information, or of any product, method or apparatus mentioned and you must make your own determination of its suitability and completeness for your own use, for the protection of the environment, and the health and safety of your employees and the users of this material.
Complies with OSHA hazard communication standard 29CFR1910.1200.

ICI Paints North America 15885 Sprague Road Strongsville, Ohio 44136 EMERGENCY TELEPHONE NO. (800) 545-2643

Carcinogenicity : The international agency for research on cancer (IARC) has evaluated ethylbenzene and classified it as a possible human carcinogen (group 2b) based on sufficient evidence for carcinogenicity in experimental animals, but inadequate evidence for cancer in exposed humans. In a 2 year inhalation study conducted by the national toxicology program (NTP), ethylbenzene vapor at 750 ppm produced kidney and testicular tumors in rats and lung and liver tumors in mice. Genetic toxicity studies showed no genotoxic effects. The relevance of these results to humans is not known.

Reproductive effects : High exposures to xylene in some animal studies, often at maternally toxic levels, have affected embryo/fetal development. The significance of this finding to humans is not known.

Mutagenicity : Triethylenetetramine has demonstrated weak mutagenic activity in standard in vitro tests, and has caused embryo- fetal toxicity and fetal malformations when fed to rats. Triethylenetetramine did not exhibit carcinogenic potential in life-time mouse skin painting studies.

Teratogenicity : No teratogenic effects are anticipated

ECOLOGICAL INFORMATION (ANSI Section 12)

No ecological testing has been done by ICI paints on this product as a whole.

DISPOSAL CONSIDERATIONS (ANSI Section 13)

Waste disposal : Dispose in accordance with all applicable regulations. Avoid discharge to natural waters.

REGULATORY INFORMATION (ANSI Section 15)

As of the date of this MSDS, all of the components in this product are listed (or are otherwise exempt from listing) on the TSCA inventory. This product has been classified in accordance with the hazard criteria of the CPR (controlled products regulations) and the MSDS contains all the information required by the CPR.

Physical Data (ANSI Sections 1, 9, and 14)

Product Code	Description	Wt. / Gal.	VOC gr. / ltr.	% Volatile by Volume	Flash Point	Boiling Range	HMIS	DOT, proper shipping name
302F0250	CATHACOAT 302H reinforced inorganic zinc primer - green base	20.54	324.16	40.40	80 f	277-304	331	paint, 3, UN1263, PGIII
302G0910	CATHACOAT 302H reinforced inorganic zinc primer - converter	7.54	338.66	41.10	80 f	243-304	*330	paint, 3, UN1263, PGIII

Ingredients Product Codes with % by Weight (ANSI Section 2)

Chemical Name	Common Name	CAS. No.	302F0250	302G0910
benzene, ethyl-	ethylbenzene	100-41-4	.1-1.0	
2-heptanone	methyl amyl ketone	110-43-0	10-20	20-30
1,2,-ethanediamine, n,n'-bis(2-aminoethyl)-	triethylenetetramine	112-24-3		1-5
iron oxide	ferric oxide	1309-37-1	1-5	
zinc oxide	zinc oxide	1314-13-2	1-5	
benzene, dimethyl-	xylene	1330-20-7	.1-1.0	
oxirane,2,2'-(((1-methylethylidene) bis (4,1-phenyleneoxymethylene))) bis-	diglycidyl ether of bisphenol a	1675-54-3	1-5	
phenol, 4,4'-(1-methylethylidene)bis-, polymer with 2,2'-((1-methylethylidene)bis (4,1-phenyleneoxymethylene))bis(oxirane)	epoxy resin	25036-25-3	1-5	
oxirane,2,2'-((1-methylethylidene)bis(4,1- phenyleneoxymethylene))bis, homopolymer	epoxy resin	25085-99-8	1-5	
cement, portland, chemicals	cement, portland	65997-15-1	10-20	
fatty acids, c18-unsatd., dimers, reaction products with polyethylenepolyamines	polyamide resin	68410-23-1		40-50
1-butanol	n-butanol	71-36-3		10-20
zinc	zinc	7440-66-6	50-60	
sulfuric acid, barium salt	barium sulfate	7727-43-7	1-5	
amine adduct	amine adduct	Sup. Conf.		10-20

Chemical Hazard Data (ANSI Sections 2, 8, 11, and 15)

		ACGIH-TLV				OSHA-PEL				S.R.	S2	S3	CC					
Common Name	CAS. No.	8-Hour TWA	STEL	C	S	8-Hour TWA	STEL	C	S	Std.				H	M	N	I	O
ethylbenzene	100-41-4	100 ppm	125 ppm	not est.	not est.	100 ppm	not est.	not est.	not est.	not est.	n	y	y	y	n	n	y	n
methyl amyl ketone	110-43-0	50 ppm	not est.	not est.	not est.	100 ppm	not est.	not est.	not est.	not est.	n	n	n	n	n	n	n	n
triethylenetetramine	112-24-3	not est.	not est.	not est.	not est.	not est.	not est.	not est.	not est.	not est.	n	n	n	n	n	n	n	n
ferric oxide	1309-37-1	5 mg/m3	not est.	not est.	not est.	5 mg/m3	not est.	not est.	not est.	not est.	n	n	n	n	n	n	n	n
zinc oxide	1314-13-2	2 mg/m3	10 mg/m3	not est.	not est.	5 mg/m3	not est.	not est.	not est.	not est.	n	y	n	n	n	n	n	n
xylene	1330-20-7	100 ppm	150 ppm	not est.	not est.	100 ppm	not est.	not est.	not est.	not est.	n	y	y	y	n	n	n	n
diglycidyl ether of bisphenol a	1675-54-3	not est.	not est.	not est.	not est.	not est.	not est.	not est.	not est.	not est.	n	n	n	n	n	n	n	n
epoxy resin	25036-25-3	not est.	not est.	not est.	not est.	not est.	not est.	not est.	not est.	not est.	n	n	n	n	n	n	n	n
epoxy resin	25085-99-8	not est.	not est.	not est.	not est.	not est.	not est.	not est.	not est.	not est.	n	n	n	n	n	n	n	n
cement, portland	65997-15-1	10 mg/m3	not est.	not est.	not est.	5 mg/m3	not est.	not est.	not est.	not est.	n	n	n	n	n	n	n	n

Footnotes:
C=Ceiling - Concentration that should not be exceeded, even instantaneously.
S=Skin - Additional exposure, over and above airborn exposure, may result from skin absorption.
n/a=not applicable
not est=not established
CC=CERCLA Chemical
ppm=parts per million
mg/m3=milligrams per cubic meter
Sup Conf=Supplier Confidential
S2=Sara Section 302 EHS
S3=Sara Section 313 Chemical
S.R.Std.=Supplier Recommended Standard
H=Hazardous Air Pollutant, M=Marine Pollutant
P=Pollutant, S=Severe Pollutant
Carcinogenicity Listed By:
N=NTP, I=IARC, O=OSHA, y=yes, n=no

Chemical Hazard Data (Continued) (ANSI Sections 2, 8, 11, and 15)

		ACGIH-TLV				OSHA-PEL				S.R. Std.	S2	S3	CC					
Common Name	CAS. No.	8-Hour TWA	STEL	C	S	8-Hour TWA	STEL	C	S					H	M	N	I	O
polyamide resin	68410-23-1	not est.	not est.	not est.	not est.	not est.	not est.	not est.	not est.	not est.	n	n	n	n	n	n	n	n
n-butanol	71-36-3	20 ppm	not est.	not est.	not est.	100 ppm	not est.	not est.	not est.	not est.	n	y	y	n	n	n	n	n
zinc	7440-66-6	not est.	not est.	not est.	not est.	not est.	not est.	not est.	not est.	not est.	n	y	y	n	n	n	n	n
barium sulfate	7727-43-7	10 mg/m3	not est.	not est.	not est.	5 mg/m3	not est.	not est.	not est.	not est.	n	n	n	n	n	n	n	n
amine adduct	Sup. Conf.	not est.	not est.	not est.	not est.	not est.	not est.	not est.	not est.	not est.	n	n	n	n	n	n	n	n

Footnotes:

C=Ceiling - Concentration that should not be exceeded, even instantaneously.

S=Skin - Additional exposure, over and above airborn exposure, may result from skin absorption.

n/a=not applicable
not est=not established
CC=CERCLA Chemical

ppm=parts per million
mg/m3=milligrams per cubic meter
Sup Conf=Supplier Confidential

S2=Sara Section 302 EHS
S3=Sara Section 313 Chemical
S.R.Std.=Supplier Recommended Standard

H=Hazardous Air Pollutant, M=Marine Pollutant
P=Pollutant, S=Severe Pollutant
Carcinogenicity Listed By:
N=NTP, I=IARC, O=OSHA, y=yes, n=no

M A T E R I A L S A F E T Y D A T A S H E E T

PRODUCT NAME: BEIGE POLYESTER TGIC
PRODUCT CODE: P-1609

HMIS CODES: H F R P
1 0 1 E

SECTION I - MANUFACTURER IDENTIFICATION

MANUFACTURER'S NAME: SUNDUR POWDER COATINGS
ADDRESS : 824 S. VANDEVENTER
ST. LOUIS, MO 63110

EMERGENCY PHONE : (314)776-4450
INFORMATION PHONE : (314)531-4950

DATE PRINTED : 10/30/02
NAME OF PREPARER : LAB

SECTION II - INGREDIENTS

COMPONENTS	CAS NUMBER	VAPOR PRESSURE mm Hg	@ TEMP	WEIGHT PERCENT
* 1,3,5 - TRIGLYCIDYL ISOCYANURATE NO EXPOSURE LIMITS ESTABLISHED	2451-62-9	N.A.	N.A.	<10%

*Indicates toxic chemical(s) subject to the reporting requirements of section 313 of Title III and 40 CFR 372.
n/a

SECTION III - PHYSICAL/CHEMICAL CHARACTERISTICS

BOILING RANGE: n/a
VAPOR DENSITY: n/a
COATING V.O.C.: 0.00 lb/gl
SOLUBILITY IN WATER: n/a
APPEARANCE AND ODOR: Free flowing powder with minimal odor.

SPECIFIC GRAVITY (H2O=1): >1.15
EVAPORATION RATE: Not applicable.
MATERIAL V.O.C.: 0.00 lb/gl

SECTION IV - FIRE AND EXPLOSION HAZARD DATA

FLASH POINT: n/a
METHOD USED: n/a
FLAMMABLE LIMITS IN AIR BY VOLUME- LOWER: n/a
UPPER: n/a

EXTINGUISHING MEDIA: Dry chemical, sand or ground limestone.

SPECIAL FIREFIGHTING PROCEDURES
Water spray may be ineffective. Water spray may be used to cool closed containers that are exposed to extreme heat. If water is used, fog nozzles are preferable. Firefighters should wear self-contained breathing apparatus and full protective clothing.

UNUSUAL FIRE AND EXPLOSION HAZARDS
Dust can form explosive mixture in air.

SECTION V - REACTIVITY DATA

STABILITY: This product is normally stable and will not undergo hazardous reactions.
CONDITIONS TO AVOID
Excessive heat and direct sunlight.

INCOMPATIBILITY (MATERIALS TO AVOID)
Avoid contact with strong alkalies, strong mineral acids, or strong oxidizing agents.

HAZARDOUS DECOMPOSITION OR BYPRODUCTS

May produce the following hazardous decomposition products when exposed to extreme heat: carbon monoxide; carbon dioxide; lower molecular weight polymer fractions; hydrogen cyanide; ammonia; oxides of nitrogen; traces of isocyanate.
Extreme heat includes, but is not limited to flame cutting, brazing, and welding.

HAZARDOUS POLYMERIZATION: Will not occur.

========== SECTION VI - HEALTH HAZARD DATA ==========

INHALATION HEALTH RISKS AND SYMPTOMS OF EXPOSURE
Dusts generated during application of powder coatings harmful if inhaled.

SKIN AND EYE CONTACT HEALTH RISKS AND SYMPTOMS OF EXPOSURE
May cause slight skin irritation. Causes eye irriation.

SKIN ABSORPTION HEALTH RISKS AND SYMPTOMS OF EXPOSURE
n/a

INGESTION HEALTH RISKS AND SYMPTOMS OF EXPOSURE
Harmful if swallowed. Dried film of this product may be harmful if chewed or swallowed.

HEALTH HAZARDS (ACUTE AND CHRONIC)
n/a

CARCINOGENICITY: NTP CARCINOGEN: Yes **IARC MONOGRAPHS:** n/a **OSHA REGULATED:** n/a
n/a

MEDICAL CONDITIONS GENERALLY AGGRAVATED BY EXPOSURE
Not applicable.

EMERGENCY AND FIRST AID PROCEDURES
If swallowed, do not induce vomiting. Gently wipe out inside mouth to remove any residual material. Contact physician.
If affected by inhalation of powder, remove to fresh air. Apply artificial respiration and other support measures as required. Contact physician.
In case of skin contact, flush immediately with plenty of water for at least 15 minutes followed by washing with soap and water.
In case of eye contact, remove contact lenses and flush eyes immediately with a gentle stream of luke warm water for at least 15 minutes.

========== SECTION VII - PRECAUTIONS FOR SAFE HANDLING AND USE ==========

STEPS TO BE TAKEN IN CASE MATERIAL IS RELEASED OR SPILLED
Wear appropriate protective clothing and respirator to prevent overexposure. Sweep up material taking care not to generate airborne dust. Collect into closable conatiners for proper disposal. Prevent runoff to storm sewers and ditches leading to neutral waterways.

WASTE DISPOSAL METHOD
Waste material must be disposed of in accordance with federal, state, provincial, and local environmental control regulations. Empty containers should be recycled or disposed of through an approved waste management facility.

PRECAUTIONS TO BE TAKEN IN HANDLING AND STORING
For better shelf life, do not store above 80 degrees Fahrenheit (26 degrees C.). Store in a well ventilated area separate from acids and alkalis. Protect from physical damage and keep containers closed and upright when not in use.

OTHER PRECAUTIONS
Store in a dry, cool place. Use only with adequate ventilation. Do not take internally. Keep out of reach of children and individuals unfamiliar with this product. Avoid contact with skin and eyes. Do not breathe dust. Wash thoroughly after handling.

SECTION VIII - CONTROL MEASURES

RESPIRATORY PROTECTION

Use an appropriate NIOSH-approved particulate filter respirator. Read the respirator manufacturer's instructions and literature carefully to determine the type of airborne contaminants against which the respirator is effective, its limitations, and how it is to be properly fitted and used. Select in accordance with OSHA 1910.134 and good industrial hygiene practice.

VENTILATION

Provide adequate general and local exhaust ventilation in volume and pattern to remove decomposition products during baking, welding or flame cutting of parts coated with is product.

PROTECTIVE GLOVES

This coating does not pose a skin absorption hazard, Gloves selection should be based on the work task to prevent skin irritation.

EYE PROTECTION

Wear sufficient eye protection to prevent contact with powdered materials. Safety goggles are recommended.

OTHER PROTECTIVE CLOTHING OR EQUIPMENT

n/a

WORK/HYGIENIC PRACTICES

Maintain a clean dust free work environment. Wash skin thoroughly with soap and warm water after handling and before smoking, eating or applying makeup.

SECTION IX - DISCLAIMER

As the conditions or methods of use are beyond our control, we do not assume any responsibility and expressly disclaim any liability for any use of this material. Information contained herein is believed to be true and accurate but all statements or suggestions are made without warranty, expressed or implied, regarding accuracy of the information, the hazards connected with the use of the material or the results to be obtained from the use thereof. Such data are offered solely for your consideration, investigation, and verification.

SECTION 3 - INSTALLATION

GENERAL

This section describes the recommended installation procedure for the Derrick Hi-G Dryer. The equipment may be shipped partially assembled to comply with shipping height restrictions. Installation of the hydrocyclone cluster is recommended before final placement of the equipment.

SAFETY

Read and understand **ALL** safety information presented in this manual **before** installing and operating this equipment. Refer to Section 2 for a summary of Warnings addressing installation, operation, and maintenance of this equipment.

Before beginning the installation review the Equipment Handling Procedures in this section. In particular, note the information concerning “lift points” and the use of spreader bars when lifting or moving the equipment.

Failure to observe proper equipment handling procedures may result in serious personal injury and/or damage to the equipment.

⚠	**WARNING! USE SPREADER BARS TO PREVENT DAMAGE WHEN LIFTING THE EQUIPMENT.**
⚠	**WARNING! TO ENSURE PROPER BALANCE AND ORIENTATION WHEN UNIT IS RAISED AND PREVENT DAMAGE TO COMPONENTS, ATTACH LIFTING SLING ONLY AT DESIGNATED LIFT POINTS. DO NOT ATTEMPT LIFTING BY ATTACHMENT TO MOTOR OR ANY OTHER LOCATION.**
⚠	**WARNING! BE SURE THAT HANDLING DEVICES HAVE SUFFICIENT LIFTING CAPACITY TO SAFELY HANDLE THE WEIGHT OF THE EQUIPMENT.**
⚠	**WARNING! DO NOT REMOVE SHIPPING BRACKETS UNTIL EQUIPMENT HAS BEEN POSITIONED AT FINAL INSTALLATION SITE.**

INSTALLATION SEQUENCE

Following is the sequence of steps for installing the Hi-G Dryer. The sequence presented may vary depending on selected options, the user's facilities, and previous experience with this type of equipment.

1. Read and understand all safety information in Section 2 before installing and operating this equipment.
2. Install hydrocyclone cluster(s).
3. Position and level equipment at installation site.
4. Remove shipping brackets.
5. Connect feed line to desilter.
6. Connect discharge duct to hopper.
7. Connect electric power supply to the equipment.
8. Install screen panels (refer to Section 6).
9. Refer to Section 4 for startup and operating instructions.

STORAGE

If the machine will not be installed immediately, it should be covered with a tarpaulin (tarp). If unit is stored outdoors, use a UV- resistant tarp, or UV-resistant shrink-wrap. Install vents when using shrink-wrap. Seal operating and maintenance manual in plastic, and attach to unit.

SITE PREPARATION AND CLEARANCE REQUIREMENTS

Prior to placement of equipment, verify that electricity and water are available at the installation site and that feed and discharge lines are provided. Also ensure that clearances around the equipment are adequate. Prepare the installation site as follows:

1. Provide adequate clearances on all four sides of machine and/or multi-machine installations. Figure 3-1 shows minimum clearances on all sides of machine.
2. Confirm that mounting structure is properly positioned and adequate to support the weight of the Hi-G Dryer.
3. Check that feed and discharge lines are available and properly sized and located for connecting to hydrocyclone inlet and discharge pipes.
4. Verify that electric power supply at the site agrees with electric power requirements of the equipment.

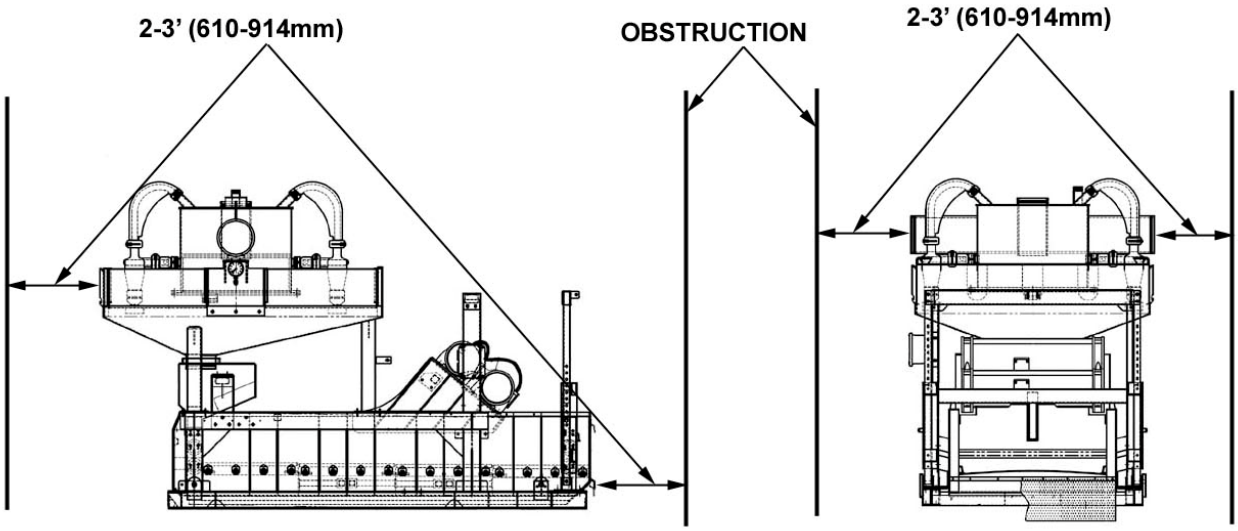

Figure 3-1 Recommended Clearances - HI-G Dryer

MOVING/POSITIONING THE EQUIPMENT

⚠	**WARNING! USE SPREADER BARS TO PREVENT DAMAGE WHEN LIFTING THE EQUIPMENT.**
⚠	**WARNING! TO ENSURE PROPER BALANCE AND ORIENTATION WHEN UNIT IS RAISED AND PREVENT DAMAGE TO COMPONENTS, ATTACH LIFTING SLINGS ONLY TO LABELED LIFTING POINTS. DO NOT ATTEMPT LIFTING BY ATTACHMENT TO ANY OTHER LOCATION.**
⚠	**WARNING! BE SURE THAT HANDLING DEVICES HAVE SUFFICIENT LIFTING CAPACITY TO SAFELY HANDLE THE WEIGHT OF THE EQUIPMENT.**
⚠	**WARNING! DO NOT REMOVE SHIPPING BRACKETS UNTIL EQUIPMENT HAS BEEN POSITIONED AT FINAL INSTALLATION SITE.**
⚠	**WARNING! WHEN USING AN OVERHEAD LIFTING DEVICE, USE ALL FOUR LIFTING LUGS PROVIDED.**

The Hi-G Dryer and hydrocyclone cluster(s) are separately skidded for shipment and must be assembled at the installation site. A label indicating the weight of each unit was affixed to the equipment. Refer to the engineering drawings in Section 8 for dimensions and other specifications.

While the Hi-G Dryer is still mounted on the shipping skid, the unit may be transported on the ground using a forklift. After the machine is removed from the shipping skid, an overhead-lifting device is required.

MOVING/POSITIONING THE EQUIPMENT (CONT'D)

Four lifting points (Figure 3-2) are attached to the lower outside corners of the machine to allow attachment of an overhead lifting device. Lifting points are labeled **"LIFT HERE ONLY"**. **DO NOT** attempt lifting equipment by attaching slings, or similar lifting aids, to the vibrator motors, or other non-designated portions of the unit. **Use of spreader bars is recommended.**

WARNING! MOTOR CORD MAY BE DAMAGED DURING HOISTING IF PINCHED BY LIFTING SLING. BE CERTAIN THAT MOTOR CORD IS PROTECTED AGAINST PINCHING.

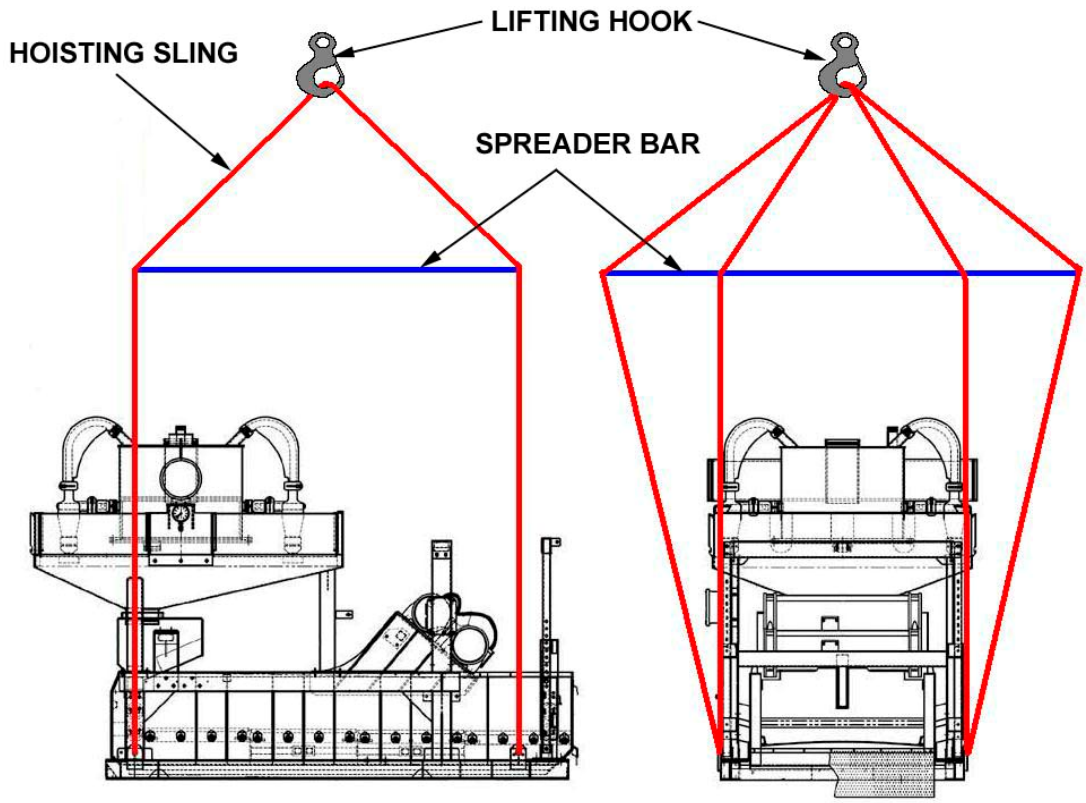

Figure 3-2 Lifting Arrangement - HI-G Dryer

HYDROCYCLONE CLUSTER INSTALLATION

While all Hi-G Dryers are fully assembled and tested prior to shipment, shipping restrictions that limit the overall height of equipment often require separation of the hydrocyclone cluster(s) for shipment. The units are then skid-mounted for shipment with the basic machine. Refer to Section 4 for operating information on the hydrocyclones.

The Hi-G Dryer may be equipped with either a single or dual desilter(s). The following procedure describes the installation of a single desilter.

Required Equipment

1. A suitable lifting device is required for lifting and positioning the hydrocyclone cluster. Weights of desilters are as follows:

12-Way	1750 lbs (794 kg)
16-Way	1900 lbs (862 kg)
20-Way	1900 lbs (862 kg)

2. In addition, 3/4” and a 7/8” wrenches are required.

Installation Procedure

Prior to installing the hydrocyclone cluster, visually inspect the assembly for any signs of damage. If unit appears to be damage free, proceed as follows:

WARNING! TO ENSURE PROPER BALANCE AND ORIENTATION WHEN UNIT IS RAISED AND PREVENT DAMAGE TO COMPONENTS, ATTACH LIFTING SLING ONLY AT DESIGNATED LIFT POINTS.

WARNING! BE SURE THAT HANDLING DEVICES HAVE SUFFICIENT LIFTING CAPACITY TO SAFELY HANDLE THE WEIGHT OF THE EQUIPMENT.

1. Note location of facility discharge pipe to be connected to desilter. If necessary to accommodate piping, re-locate Victaulic® cap to opposite end of discharge pipe.

Note! Confirm that facility piping corresponds with hydrocyclone cluster discharge pipe before proceeding with installation.

2. Attach overhead lifting device to both LIFT points (Figure 3-3).
3. **Remove and retain hardware** securing cluster to skid-mounted shipping brackets. Do not remove shipping brackets from skid. Retained hardware consists of the following parts:

Quantity	Description
4	1/2-13 x 1-3/4” Hex Head Bolt
8	1/2” Flat Washer
4	1/2” Lockwasher
4	1/2” Hex Nut

Note! Retained hardware will be used to attach the desilter(s) to the collection pan.

4. Carefully lift cluster free of shipping skid.

Figure 3-3 Hydrocyclone Cluster Lift Points and Shipping Bracket Location

5. Orient hydrocyclone cluster so that open end of discharge pipe is aligned with facility pipe.
6. Carefully guide cluster downward into notches of collection pan mounting brackets (Figures 3-4 and 3-5), and align with bracket mounting holes.
7. Using hardware retained in step 3, install but do not tighten hardware on one cluster mounting bracket with hardware arrangement as shown.
8. Install hardware on opposite side of cluster, and then tighten all hardware on both cluster mounting brackets.

Figure 3-4 Lowering Hydrocyclone Cluster Into Collection Pan

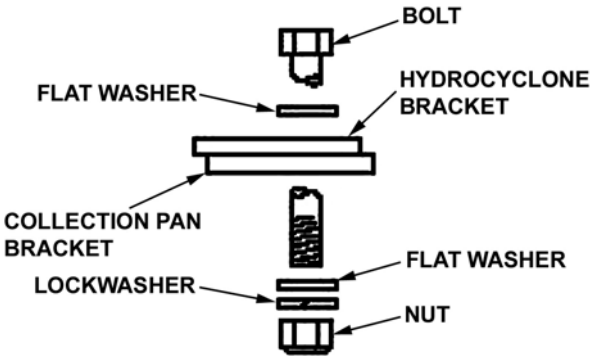

Figure 3-5 Hydrocyclone Cluster Mounting Details

EQUIPMENT LEVELING

To ensure even distribution of feed slurry across the screen panels, the Hi-G Dryer must be properly leveled. Leveling along the length and width of the unit is shown for a typical machine in Figure 3-6. A 4-foot level is recommended to check level. Non-compressible shims should be used as required to level the machine.

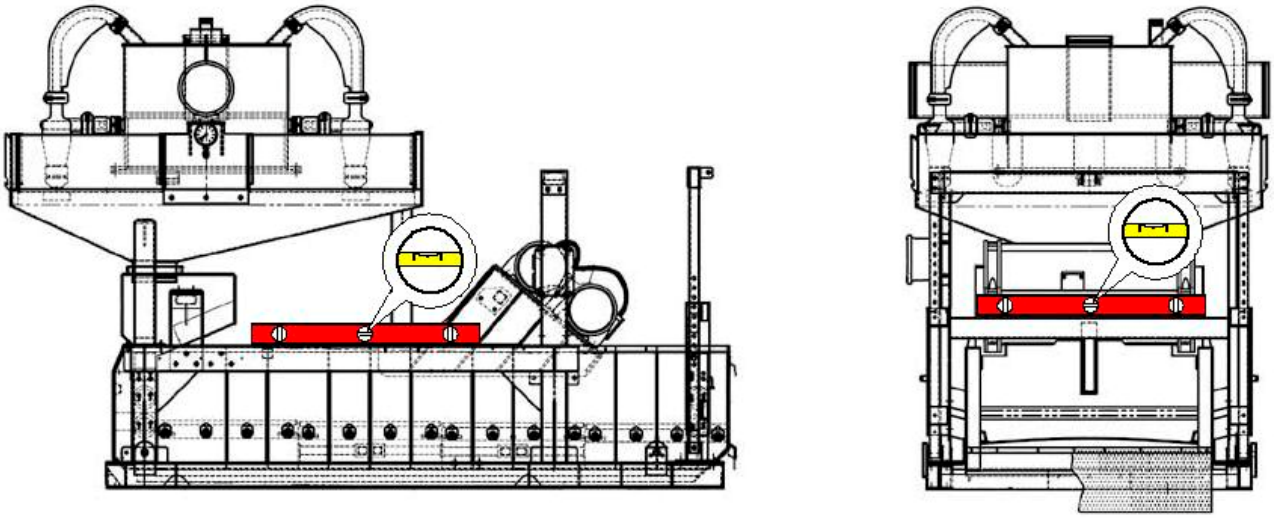

Figure 3-6 Equipment Leveling

SHIPPING BRACKETS

Note! Do not discard shipping brackets after removal. These components should be re-installed whenever the machine is moved to prevent movement of the screen frame during transit.

Following final positioning and leveling of the Hi-G Dryer, remove the shipping brackets (Figure 3-7) that were installed to stabilize the screen frame and motor during transit. Two shipping brackets and two PVC plugs secure the movable screen frame to the stationary support frame. The shipping brackets **must be re-installed whenever the fluid cleaner is moved** and **must be removed prior to startup and operation** of the machine.

For high visibility, the two shipping brackets are painted orange, and the PVC plugs are gray with an orange label. Each shipping component is labeled **DISCONNECT BEFORE STARTUP**. Shipping brackets are installed on both the left and right sides of the machine.

Remove the four orange brackets and two orange-labeled PVC plugs securing the screen frame to the stationary hopper or support structure. No special removal sequence is required. Retain the shipping brackets and PVC plugs and associated attaching hardware for future use.

Discharge End Bracket

Feed End PVC Plug

Side Bracket

Figure 3-7 Shipping Bracket Locations

FEED AND DISCHARGE CONNECTIONS

The Hi-G Dryer may be equipped with clusters having 12, 16, or 20 hydrocyclones. The following paragraphs describe the inlet and overflow connections.

Hydrocyclone Cluster

All hydrocyclone clusters have inlet and overflow pipes designed to accept Victaulic® couplings (Figure 3-8). The customer feed line is connected to the inlet manifold that supplies the 4" hydrocyclones. The inlet connection is on top of the manifold, and two horizontal overflow connections are provided. Either or both overflow connection(s) may be used to accommodate the customer piping arrangement. For single inlet piping, the unused connection must be capped.

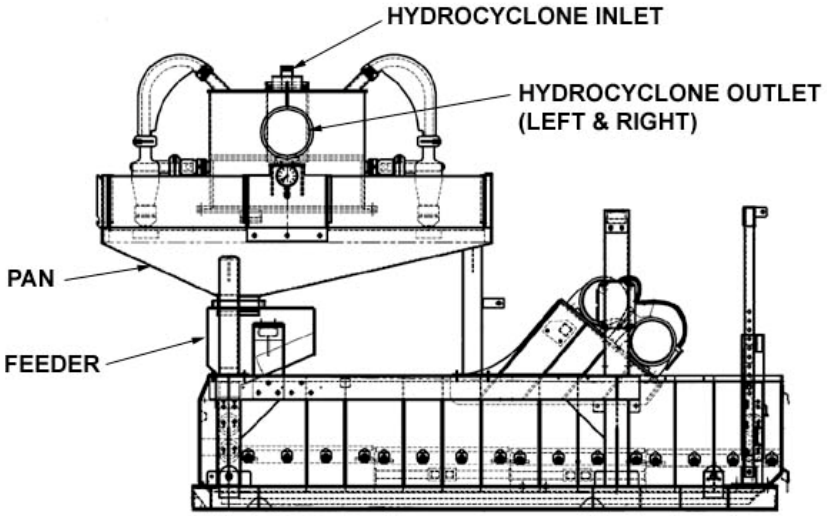

Figure 3-8 Hydrocyclone Cluster Connections

Collection Pan

Underflow solids are directed into the collection pan, which feeds directly into the feeder. No external connections are required.

ELECTRIC POWER CONNECTIONS

Remove the cover from the input power box, and connect the facility electrical power supply to the junction box in accordance with Figure 3-11 and wiring schematic in Section 8.

The vibrator motors are three-phase, 50 or 60 Hz motors. The **motors are not dual wound** and must be operated at the design voltage. For motor power requirements, refer to the label on the motor data plate.

ELECTRIC POWER CONNECTIONS (CONT'D)

⚠	**WARNING! VIBRATOR MOTOR MUST BE OPERATED AT THE DESIGNATED SUPPLY VOLTAGE.**
⚠	**WARNING! HIGH VOLTAGE MAY BE PRESENT. BE SURE FUSED DISCONNECT SUPPLYING ELECTRICAL POWER TO THIS EQUIPMENT IS OPEN. LOCK OUT AND TAG OUT POWER SUPPLY TO PREVENT ACCIDENTAL APPLICATION OF POWER WHILE MAKING ELECTRICAL CONNECTIONS.**
⚠	**WARNING! ELECTRICAL CONNECTIONS MUST BE MADE IN ACCORDANCE WITH THE NATIONAL ELECTRICAL CODE (NEC) AND ALL APPLICABLE LOCAL CODES. FAILURE TO COMPLY MAY RESULT IN AN UNSAFE CONDITION THAT COULD INJURE PERSONNEL OR DAMAGE EQUIPMENT. ENSURE THAT ALL ELECTRICAL AND CONDUIT CONNECTIONS ARE SECURE.**

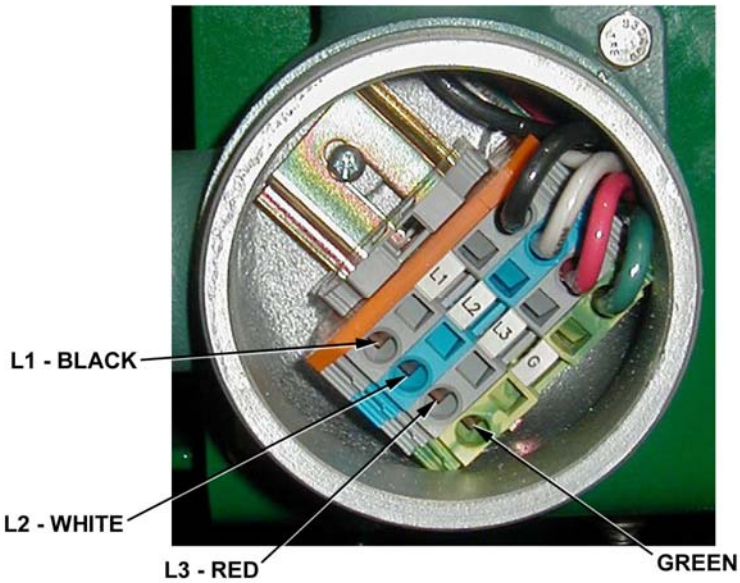

Figure 3-11 Electric Power Supply Connections to Input Power Strip

A fused disconnect primary power supply is required for this equipment. The fused disconnect and interconnecting wiring to the equipment must be suitably sized and in accordance with National Electrical Code (NEC) standards and all other applicable state and local codes.

Additional wiring requirements are as follows:

1. The fused disconnect device shall have sufficient interrupting capacity to clear the maximum fault current capability of the power supply system.
2. The GROUND connection in the power supply junction box must be connected to a known ground.

SCREEN PANEL INSTALLATION

The Hi-G Dryer is shipped without screen panels installed. Installation of screen panels for the first time is described in the following procedure. For routine screen panel replacement and other screen retention system maintenance, refer to Section 6.

Retention System

The High-G Dryer utilizes the Rapid Change Draw Bolt System to retain screen panels. The following procedure describes installation of screen panels. Prior to installing screen panels, remove all packing and shipping materials from the bed of the screen frame.

Installation Procedure

Locating bars provided along the left interior wall of the screen bed ensure that screen panels are centered left to right on the screen bed. Draw bolts are then engaged and tightened in stages, going from left to right side and finishing with final tensioning on the right side.

Note! Right and left sides of the equipment are determined by standing at the feed end and looking toward the discharge end.

Correct installation of screen panels optimizes screen performance and extends life. To install screen panels, proceed as follows:

1. Before placing screen panel in the screen frame, verify that all components of the screen frame bed are in good condition (refer to Section 5). Replace any worn or damaged components.
2. Place screen panel on bed of screen frame, slide panel into contact with locating bars on left side of screen bed (Figure 3-12), and slide against shoulder of cross support at the feed end of the screen frame.

Note! To ensure proper tensioning and prevent process material from passing beneath screen, the panel must contact the locating bars on the left side of the screen frame and be pulled rearward against the step on the cross support.

3. Confirm that heads of left side draw bolts are oriented in the vertical (unlocked) position (Figure 3-13).
4. Position draw bar on left side of screen frame to engage hook strip along top outer edge of screen panel, and pass heads of draw bolts through slots in draw bar. Rotate heads of draw bolts 90 degrees to horizontal (locked) position.
5. Lift draw bar slightly to ensure that screen panel is above side support, and hand-tighten left side draw bolt nuts.
6. Repeat steps 3 through 5 on right side of screen frame.

Installation Procedure (Cont'd)

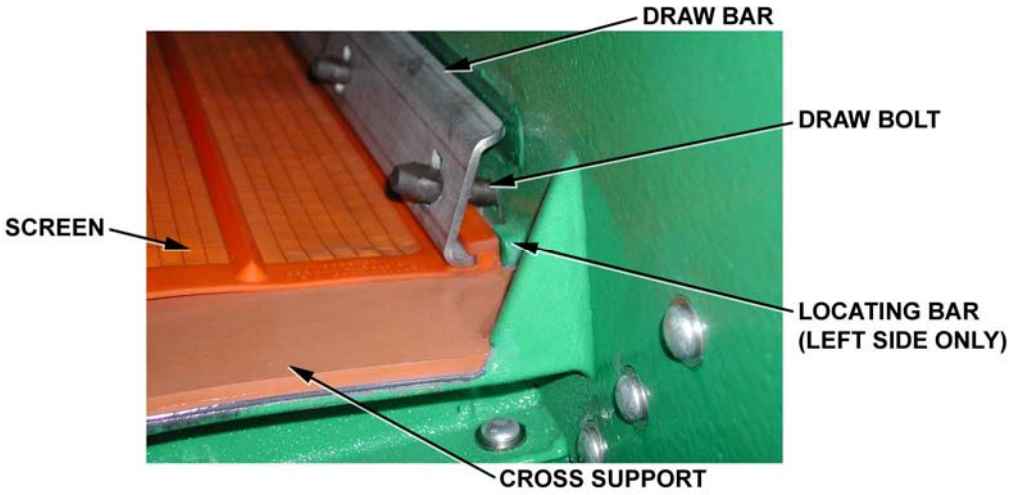

Figure 3-12 Draw Bar Engagement With Hook Strip

Note! In the following steps the tightening sequence must be followed. Incorrect tightening sequence will cause screen to flutter, resulting in premature wear.

7. Using ratchet or T-handle wrench, tighten the left side draw bolts from outside screen frame in the sequence shown in Figure 3-13.
8. Repeat tightening sequence on right side of screen frame.

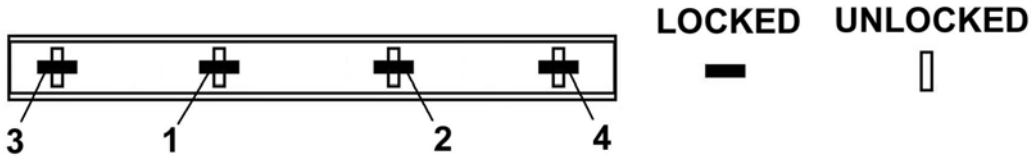

Figure 3-13 Draw Bolt Tightening Sequence

9. After tightening all draw bolts, manually verify that screen panel is correctly positioned, properly tensioned, firmly in contact with screen frame bed, and that ribs are straight and aligned with stringer protectors of adjacent screen frame. When properly tensioned, exposed threads on all draw bolts should be about equal (usually about three threads), as shown in Figure 3-14. Re-adjust panel positioning and re-tension as required.

WARNING! INCORRECT TIGHTENING WILL CAUSE IMPROPER SCREEN PANEL TENSIONING, RESULTING IN PREMATURE WEAR. BE SURE THAT CORRECT TIGHTENING SEQUENCE IS FOLLOWED.

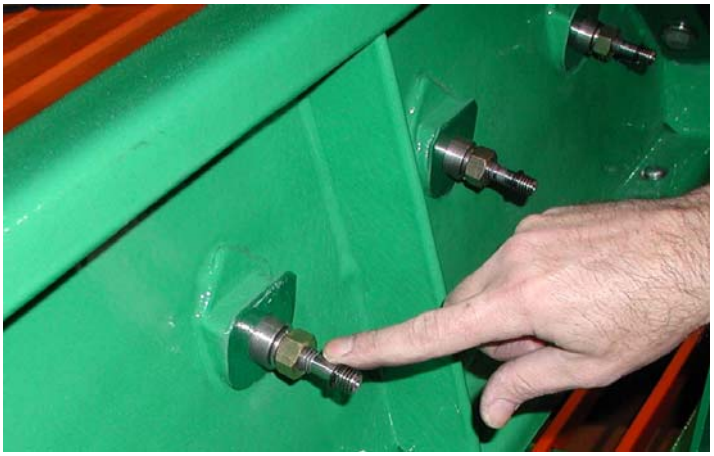

Figure 3-14 Confirming Proper Screen Panel Tensioning

MACHINE STARTUP

Refer to Section 4 for initial startup and operating procedures for the Flo-Line Cleaner.

WARNING! DO NOT ATTEMPT TO OPERATE MACHINE WITH SHIPPING BRACKETS INSTALLED.

SECTION 4 - OPERATING INSTRUCTIONS

GENERAL

This section includes initial and normal startup, normal shutdown, and emergency shutdown procedures for the Hi-G Dryer. Operating procedures are also included for the hydrocyclones screen frame angle adjuster, and screen panel retention system.

OPERATING SAFETY

	WARNING! MOTOR HOUSING BECOMES HOT DURING OPERATION AND MAY CAUSE SEVERE BURNS. DO NOT TOUCH MOTOR HOUSING DURING OR IMMEDIATELY AFTER MOTOR HAS BEEN OPERATING.
	WARNING! ALL OPERATING AND MAINTENANCE PERSONNEL MUST READ AND UNDERSTAND ALL SAFETY INFORMATION IN THIS MANUAL BEFORE WORKING WITH THE EQUIPMENT.
	WARNING! BE SURE THAT ALL PERSONNEL ARE CLEAR OF MACHINE BEFORE ADJUSTING ANGLE OF SCREEN BED.
	WARNING! DO NOT ATTEMPT TO OPERATE EQUIPMENT WITH SHIPPING BRACKETS INSTALLED.
	WARNING! BEFORE STARTING UP MACHINE, BE SURE THAT ALL PERSONNEL ARE CLEAR OF EQUIPMENT.

INITIAL STARTUP

Perform the Initial Startup procedure when the Hi-G Dryer is being started for the first time, following parts replacement, or when equipment has been removed from service for an extended period. Refer to the following table for initial startup instructions.

INITIAL STARTUP	
Step	**Procedure**
1	Confirm that all operators and maintenance personnel have read and understand all operating and safety information in Section 2.
2	Verify that equipment has been installed properly.
3	Check that all tools, documents, and shipping brackets have been removed and there are no obstructions to operation, giving special attention to bed of screen frame.
4	Check that services and utilities are available at the installation site.
5	Verify that screen panels have been installed properly.
6	Start Hi-G Dryer in accordance with Normal Startup procedure below.

NORMAL STARTUP

The following procedure shall be performed at each machine startup:

NORMAL STARTUP	
Step	**Procedure**
1	Verify that all personnel are clear of Hi-G Dryer before applying electric power to equipment.
2	Closed fused disconnect to apply power to Hi-G Dryer.
2	Press **START** pushbutton to apply electric power to the vibrator motors. Allow motors to reach operating temperature (about 5 minutes).
3	Start pump or open valve to introduce flow of material to hydrocyclone cluster.
4	Observe pool configuration that forms on bed of screen frame, and adjust the AWD and/or inlet flow rate, as required to achieve desired pooling on screen panels.

NORMAL SHUTDOWN

The normal shutdown procedure is to be used for controlled stopping of operation. Normal shutdown is performed for routine activities such as cleaning, lubrication, inspection, adjustment, or screen panel replacement.

NORMAL SHUTDOWN	
Step	**Procedure**
1	Divert or discontinue flow of material to Hi-G Dryer.
2	Allow all oversize and undersize material and liquid to discharge from screen frame.
3	Using a water hose, wash remaining material from surfaces of screen panels and edges of screen panels where they contact sidewalls of screen frame.
4	Press **STOP** button to stop vibrator motors, and open fused disconnect supplying electric power to the machine.
5	Lock out and tag out machine.

EMERGENCY SHUTDOWN

To immediately stop the Hi-G Dryer in case of danger to personnel or other emergency, shut down electric power at the supply source.

WARNING! IN CASE OF ANY DANGER TO PERSONNEL, IMMEDIATELY SHUT DOWN ELECTRIC POWER TO THE EQUIPMENT.

DESILTER OPERATION

Optimal performance of hydrocyclones requires a proper balance of feed head (inlet pressure), feed rate (GPM) and apex opening. Improper balance of any of these variables can adversely affect performance.

Two operational scenarios are presented in the following paragraphs. The first scenario describes normal operating conditions in which all variables are correctly balanced. The second scenario shows a condition referred to as “roping” which results from an improper balance of the variables.

Normal Operation

In normal operation, feed slurry is introduced tangentially into the interior of the hydrocyclone (Figure 4-1) at high velocity causing a whirlpool effect to occur inside the cone. The swirling motion of the slurry drives the larger, denser particles outward against the cone wall while the smaller, lighter particles move toward the center of the cone.

The low-pressure vortex at the center of the cone pulls in the excess liquid and small particles, as well as drawing in air through the apex at the lower discharge end of the cone. The high-velocity air stream aids the upward flow of liquid and small particles toward the cone’s upper discharge, while the spiraling stream of liquid and larger particles flows downward along the cone wall toward the lower discharge. Large solids leaving the lower discharge may be further processed for removal of remaining small particles and liquid, while the upper discharge from the hydrocyclone is often routed to a centrifuge for additional solids removal.

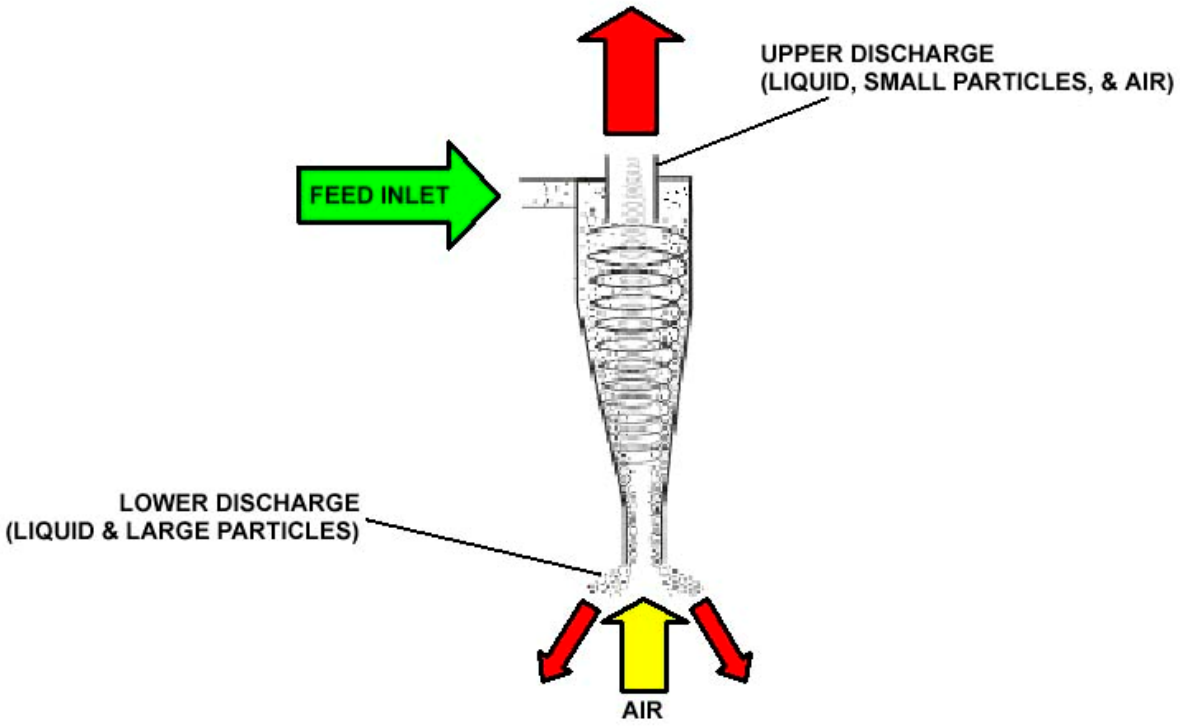

Figure 4-1 Normal Hydrocyclone Operation

“Roping”

“Roping” is a term applied to a solid discharge stream (Figure 4-2) flowing from the hydrocyclones. This undesirable discharge pattern results from overloading the apex opening with solids, thereby preventing air from entering the cone. Due to the apex blockage, feed material entering the cone can no longer move downward and, therefore, flows directly out the upper discharge at the top of the cone. In this abnormal operating mode, flow from the upper discharge contains large particles that would normally flow out the lower discharge at the bottom of the cone. If permitted to continue for a lengthy period of time, the blockage becomes difficult to clear and the risk of internal damage to the cone increases.

“Roping” discharge results in reduced solids removal capability, increased probability of wear to hydrocyclone components, and potential damage to the feed pump.

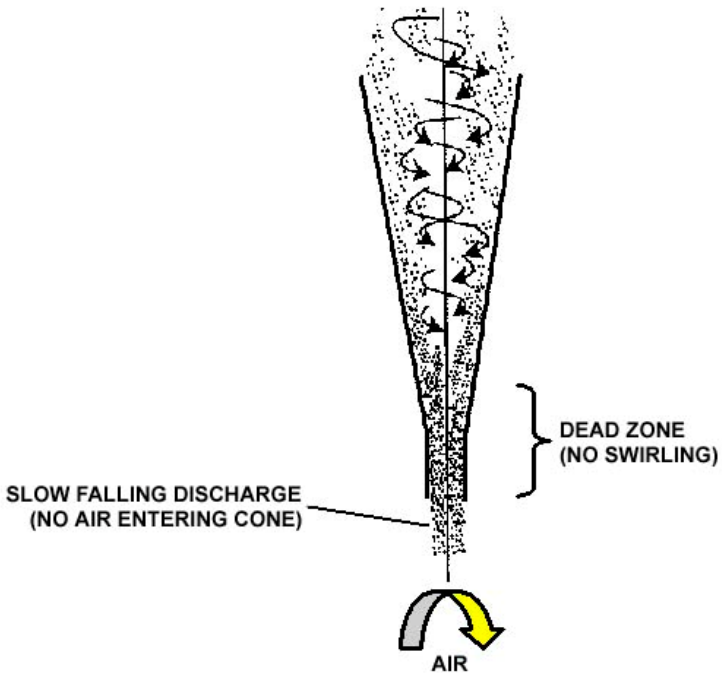

Figure 4-2 Abnormal Hydrocyclone Operation - “Roping” Discharge

Spray Patterns

The spray pattern varies in response to the feed head (inlet pressure), feed rate, and hydrocyclone apex opening. To maximize overall efficiency, the spray pattern of each cone must be balanced for optimal performance. This is done by observing the lower discharge pattern and then adjusting the apex opening to achieve the correct discharge angle (Figure 4-3) for the prevailing feed rate and inlet pressure.

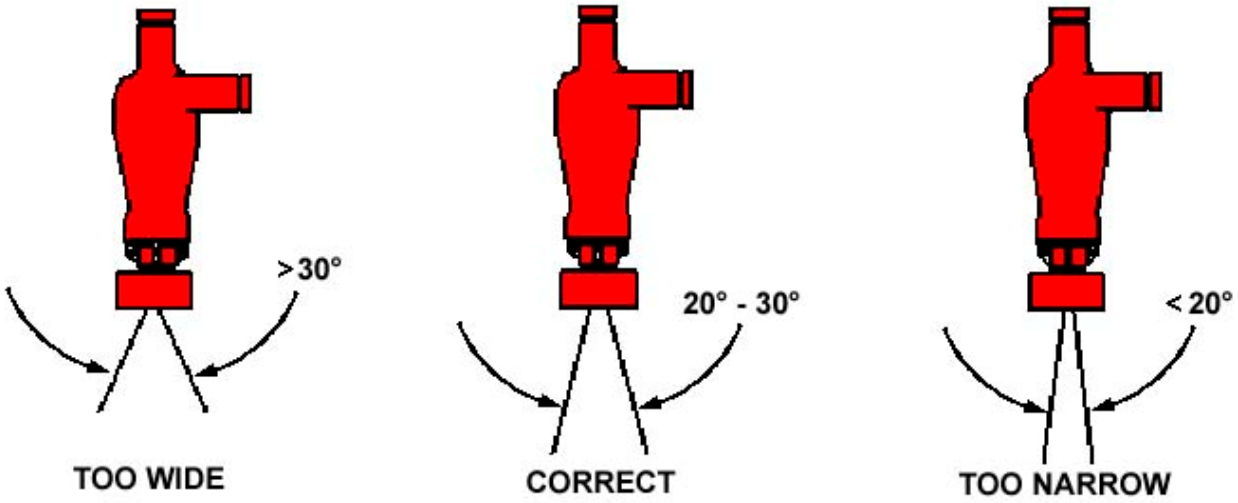

Figure 4-3 Hydrocyclone Spray Patterns

Spray Pattern Versus Performance

The three spray patterns are interpreted as follows:

TOO WIDE - Spray angle greater than 30° with a hollow center. In normal operation, this pattern is undesirable. This spray pattern indicates that the exit diameter of the apex is too large, and an excessive amount of liquid discharges along with the solids flowing from the bottom of the cone.

Correct this condition by tightening triangular nut (turning clockwise) until desired spray profile is achieved.

CORRECT - Spray angle in the range of 20° to 30° with a hollow center. In normal operation, this pattern is desirable.

No adjustment is required.

TOO NARROW - Spray angle less than 20° with a hollow center. In normal operation, this pattern is undesirable. This spray pattern indicates exit diameter of the apex is too small, the solids discharge is too dry, and an excessive solids are being discharged with the liquid from the upper discharge.

Correct this condition by loosening triangular nut (turning counterclockwise) until desired spray profile is achieved.

Recommended Operating Pressures

Recommended operating pressures for the hydrocyclones are listed in the following table.

Recommended Desilter Operating Pressures - 75' Head Inlet Pressure		
Slurry Weight (PPG)	**Specific Gravity**	**Operating Pressure (PSI)**
8.33	1.00	32
9.00	1.08	35
10.00	1.20	39
11.00	1.32	43
12.00	1.44	47
13.00	1.56	51
14.00	1.68	54
15.00	1.80	58
16.00	1.92	62
17.00	2.04	66

Where:

PPG = Pounds per Gallon

Specific Gravity = $\left(\frac{Mud \quad Weight}{8.33}\right)$

1 PSI = 2.309 Feet of Head

Operating Pressure = $\left(\frac{Feet \quad of \quad Head}{2.309}\right)\left(\frac{Mud \quad Weight}{8.33}\right)$

SCREEN FRAME LIFTING MECHANISM OPERATION

Using the screen frame lifting mechanism to elevate the discharge end of the screen frame slows the forward progress of the slurry over the screen bed (Figure 4-4). The screen frame may be elevated several degrees, as determined by several factors:

- Particle size
- Concentration of solids in the slurry
- Feed rate
- Type of slurry
- Type of screen
- Screen cut point

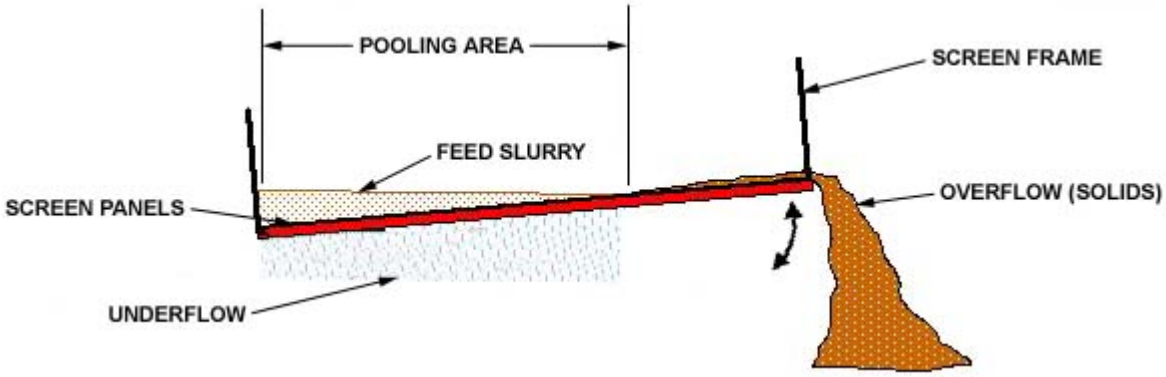

Figure 4-4 Screen Frame Pooling Area

A spring-loaded plunger and reversible pawl provide a ratcheting action during movement of the operating handle. A full 180 degrees of movement is possible in both directions. Depending on pawl setting, moving the handle in one direction turns the jack screw to raise or lower the screen frame, while in the other direction the jack screw remains stationary during handle movement. The spring-loaded pawl permits the operator to switch the direction to either raise or lower the screen frame, as required.

The angle of the discharge end of the screen frame is infinitely adjustable within the equipment's available range. To adjust the AWD, proceed as follows:

WARNING! BE SURE THAT ALL PERSONNEL ARE CLEAR OF MACHINE BEFORE ADJUSTING ANGLE OF SCREEN BED.

1. Pivot operating handle (Figure 4-5) downward until horizontal, if not already done, and set jack screw ratchet detent to either raise or lower discharge end of screen frame.
2. Using the operating handle, rotate jack screw left to raise or right to lower screen frame end to the desired angle. Use stamped markings on the upright shafts to assist in determining angular setting.

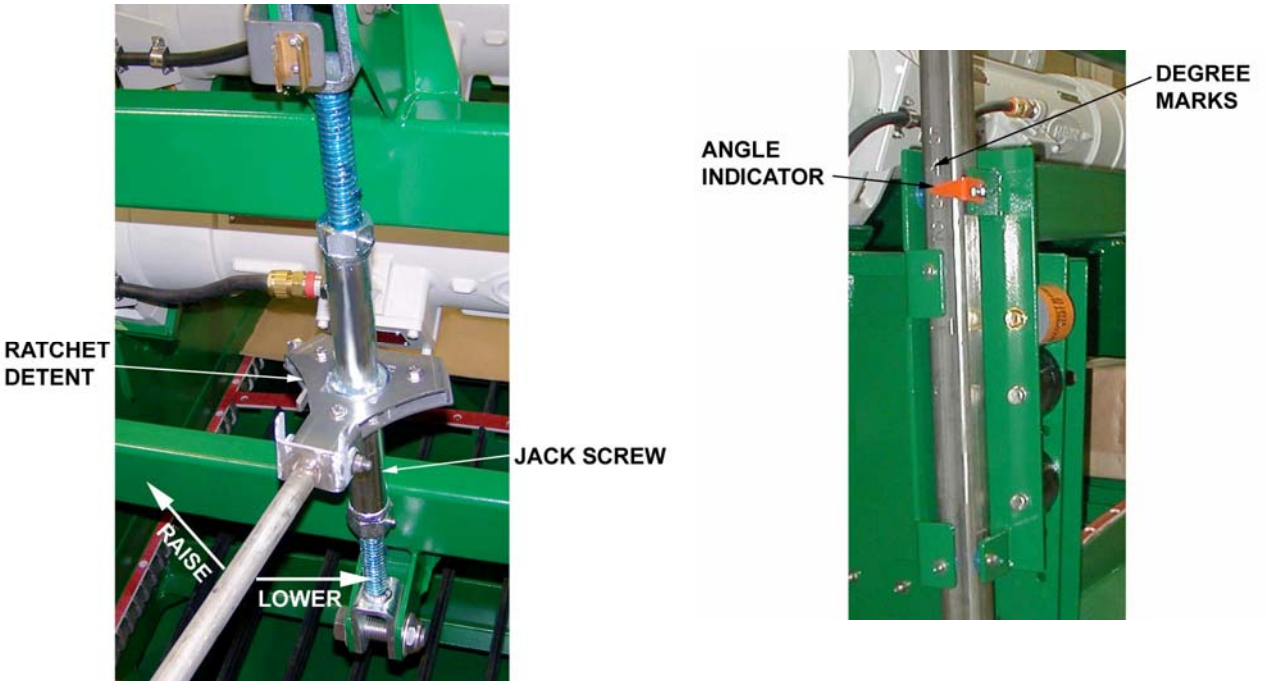

Figure 4-5 Manual Jack Screw Lifting Mechanism Adjustment

POOL CONFIGURATION

Extensive testing has shown that the most efficient pool configuration maximizes use of the available screen area. In general, the pool should cover all screen panels except for the discharge screen, which is the last screen on the screen frame.

There is **no "one correct setting"** for the lifting mechanism. The mechanism allows the operator to easily change the angle of elevation in rapid response to ever-changing conditions and feed rates of the slurry. Suggested changes to an existing screen angle are shown in Figure 4-8. Note that the dark pattern at the left represents the area of the screen panels covered by the pool. The ideal coverage is for the pool to cover screen panels 1 and 2. If coverage retreats to halfway on screen panel 1, the screen frame angle may be reduced and/or flow increased. Finally, if the pool covers nearly all of screen panel 3, the screen angle may be increased and/or flow decreased to reduce the pooling area.

Note! A negative screen frame angle is useful for cleaning slurry deposits from interior walls of the screen frame and from the top surfaces of the screen panels.

POOL CONFIGURATION	ANGLE ADJUSTMENT	ALTERNATIVE ADJUSTMENT
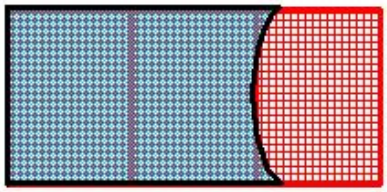	Correct screen angle No adjustment required	
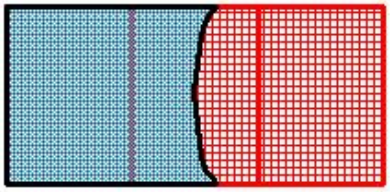	Decrease screen angle	Increase flow
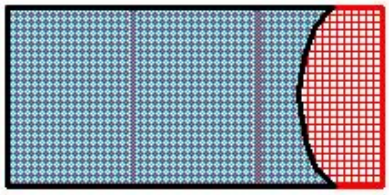	Increase screen angle	Decrease flow

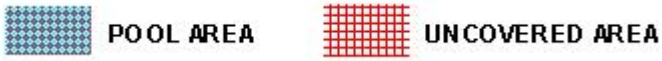

Figure 4-8 Pool Configuration and Adjustments

SCREEN RETENTION SYSTEM OPERATION

Proper screen functioning depends on secure retention and full contact with the screen bed. Be sure that each screen is secured by verifying that all draw bolts are in the horizontal (locked) position. Refer to Section 6 for detailed description, operation, and repair of the system.

SECTION 5 - MAINTENANCE

GENERAL

This section contains routine maintenance, inspection, screen panel replacement, and parts replacement for the Hi-G Dryer. Routine maintenance will ensure maximum life and trouble-free operation. While the maintenance schedule presented in this section is flexible, modifications should be based on experience with operating the equipment at your facilities. A maintenance log (see Section 9) should be kept to help establish a routine maintenance schedule, as well as to monitor and adjust the schedule as necessary throughout the equipment's life.

Consider the following factors when establishing a maintenance schedule:

- Duty cycle
- Ambient temperature
- Operating environment

ROUTINE MAINTENANCE

Routine maintenance consists of overall inspection and cleaning. Following are the recommended routine maintenance procedures.

ROUTINE MAINTENANCE	
Action	**Frequency**
Inspect feed connection to hydrocyclone cluster for leaks, and tighten connection as required.	Each shift
Inspect discharge duct connection on side of hopper for leaks. Tighten connection and/or add silicone sealant to prevent leakage.	Each shift
Inspect cover on unused hopper discharge connection for leaks. Tighten connection and/or add silicone sealant to prevent leakage.	Each shift
Using a water hose, wash off accumulated process material from screen frame, interior of hopper and screen angle adjustment components. Excess process material in these areas may impede angle adjustment of screen frame and can reduce screen frame vibration if the frame bottoms out on the buildup.	Each shift
Check for and remove any accumulation of process material or other obstruction in feeder interior. Feeder blockage may cause excessive splashing and uneven distribution of slurry onto the screen bed.	Weekly

ROUTINE MAINTENANCE (CONT'D)

ROUTINE MAINTENANCE	
Action	**Frequency**
Inspect entire machine for evidence of coating damage, including exposed base metal, corrosion, deep scratches, or other voids. Repair damaged areas in accordance with coating manufacturers' specifications (refer to Section 2).	Weekly
Lubricate lifting mechanism jack screw assembly using Dura-Lith EP, Mobilux EP, or equivalent grease.	Quarterly

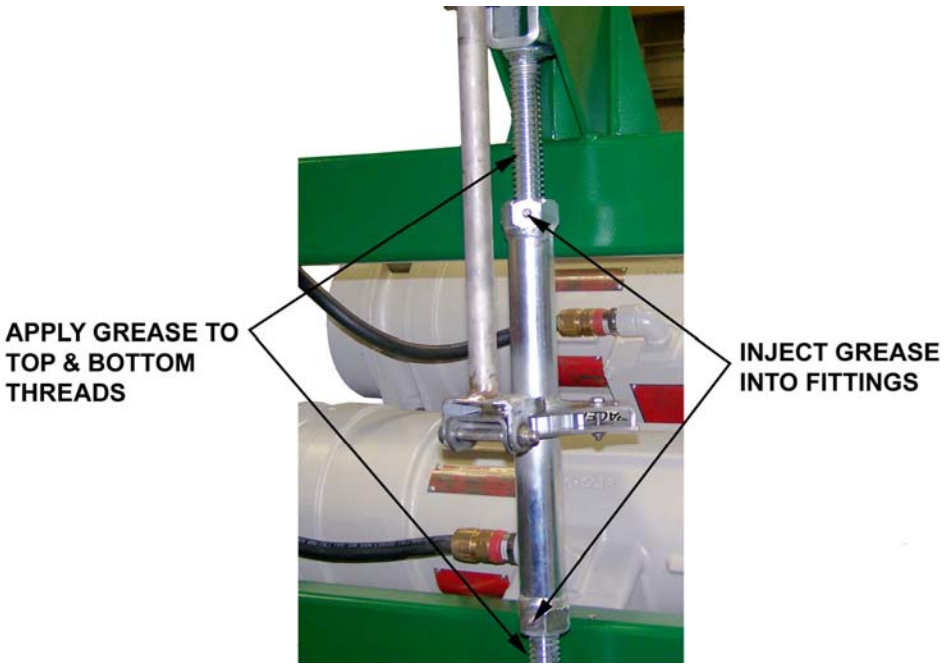

SCREEN FRAME

The screen frame includes mounting provisions for the vibrator motor and the screen tensioning system, as well as providing the mounting surface for the screen panels. It is suspended between the vertical legs of the support frame or hopper. During normal operation, the screen frame and tensioning components accumulate residual mud that should be removed periodically. Refer to the screen frame maintenance table for key inspection and maintenance locations.

In addition, the eight float mounts should be inspected and replaced when damage is evident. Since these components isolate the vibratory motion of the screen frame from the stationary parts of the machine, deterioration may occur over time.

SCREEN FRAME MAINTENANCE	
Action	**Frequency**
Inspect float mounts for excessive sag (greater than 1” / 25.4 mm) and/or signs of deterioration or damage. If excessive sag is found, clean excess buildup of process material from screen frame to reduce loading on float mounts. If excessive sag remains, or damage is evident, float mounts must be replaced. Note that mounts at discharge end must be replaced as a pair (top and bottom).	Monthly or as required
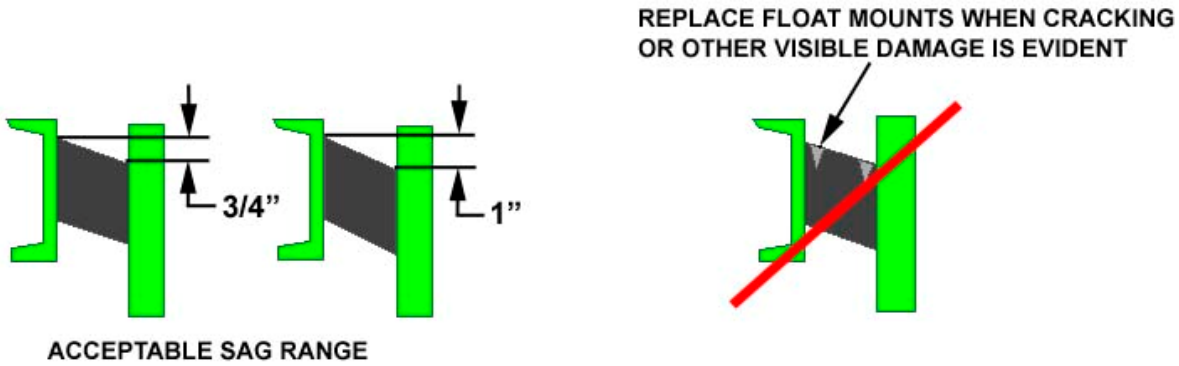	
Inspect side supports, cross supports, and channel protectors for signs of deterioration or damage (Figures 5-1 and 5-2). The rear feeder seal prevents feed slurry from entering the hopper at the feed end, while the front curtain prevents solids from entering the hopper at the discharge end. Replace front curtain and/or rear feeder seal if function is compromised.	Monthly
Check tension and condition of screen panels. They should be in complete contact with the screen frame bed and should not have holes or other damage that would allow solids to pass through. Replace damaged screen panel(s).	Each shift
Inspect side supports, cross supports, and channel protectors for deterioration or damage. Defective components may permit damage to the screen panels. Refer to appropriate drawing in Section 8 for replacement parts information.	Each screen panel change
Inspect screen tensioning components (refer to Section 6) for signs of deterioration or damage. The screen tensioning components apply tension to the screen panels to securely position them against the bed of the screen frame. Improper screen panel tensioning will reduce the life of the screen panels. Refer to Section 6 for operation and repair parts.	Each screen panel change
Perform routine maintenance on vibrator motors as described in Section 7.	See Section 7 for frequency

SCREEN FRAME (CONT'D)

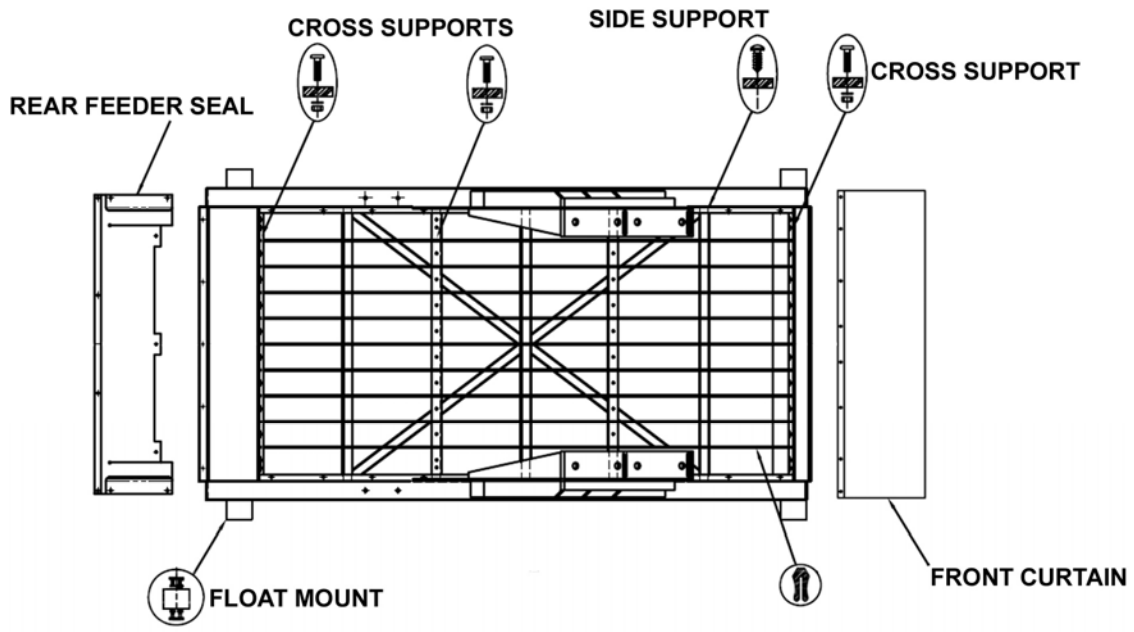

Figure 5-1 Screen Frame Inspection and Maintenance

Figure 5-2 Stringer Protector Wear Patterns - Cross-Sectional View

VIBRATOR MOTORS

Removal, installation, parts replacement, and troubleshooting procedures for the vibrator motors are included in Section 7.

SCREEN FRAME LIFTING MECHANISM MAINTENANCE

The lifting mechanism jack screw requires periodic lubrication and occasional adjustment of the spring plunger. Refer to Routine Maintenance at the beginning of this section for periodic lubrication instructions. If the ratchet action becomes noticeably imprecise or the pawl fails to latch during jack handle movement, the spring plunger should be adjusted as follows:

1. Turn adjusting screw (Figure 5-3) clockwise to increase spring tension on plunger.
2. Move operating handle in both directions to confirm proper ratcheting action and pawl engagement during jack screw rotation.
3. If pawl does not engage jack screw properly or ratchet action is insufficient, repeat steps 1 and 2.

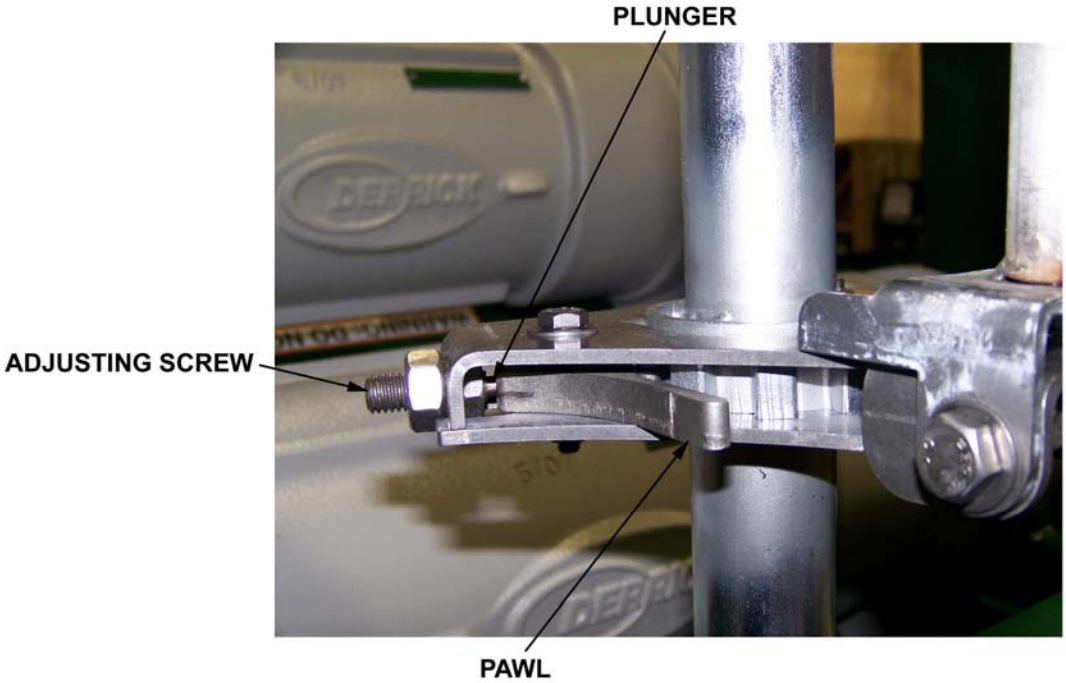

Figure 5-3 Spring-Loaded Plunger Adjustment

SCREEN PANEL REPLACEMENT

Repair and replacement instructions for the rapid change screen retention system are included in Section 6. If installing panels for the first time, follow the instructions in Section 3.

SECTION 6 - SCREEN RETENTION SYSTEM

RAPID CHANGE DRAW BOLT

GENERAL

Proper screen functioning relies on tight retention and full contact with the screen bed and related components (side supports, cross supports, and channel protectors). The rapid change draw bolt assembly is a highly effective screen tensioning system for properly securing the screen panels to the screen frame.

DESCRIPTION AND OPERATION

The rapid change draw bolt assembly allows screen panels to be changed quickly and easily. Several rapid change draw bolt assemblies are used in combination with a draw bar (Figure 6-1) to apply tension to the screen panel. The lower edge of the draw bar engages a hook strip on the outer edge of the screen panel.

The shaft of the draw bolt passes through the sidewall of the screen frame, and the T-shaped head of the draw bolt is passed through slots in the draw bar and then rotated to provide the clamping action. Tightening the nut outside the screen frame pulls the draw bolt and draw bar to tighten and securely clamp the edge of the screen panel to the screen frame. Eight rapid change draw bolt assemblies—four per side—are required for each 48” x 30” or 36” x 30” screen panel.

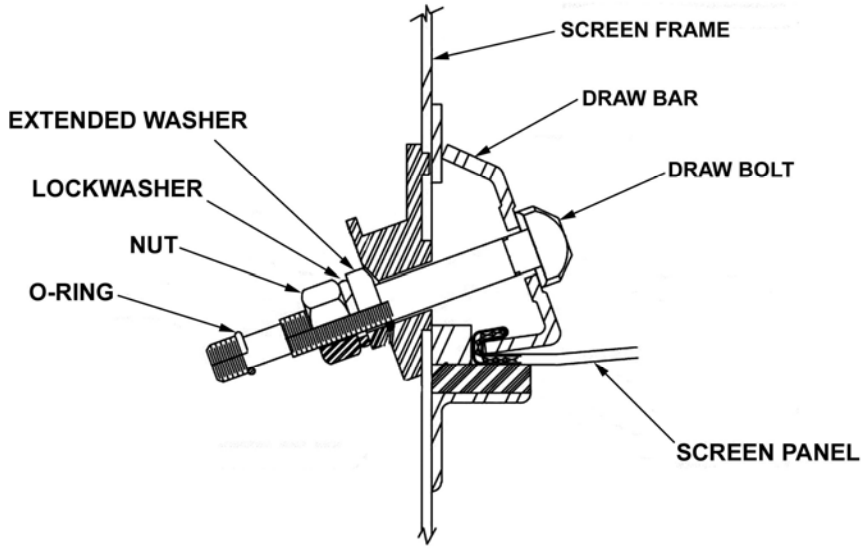

Figure 6-1 Rapid Change Draw Bolt Assembly Components

SCREEN PANEL REPLACEMENT

This procedure should be used to replace damaged or worn screen panel(s). Screen panels and screen bed components should be inspected in accordance with Section 5. They should be replaced when wear is evident and the screen has become ineffective.

Tools Required

Two different styles of wrenches (Figure 6-2) may be used for removal, tensioning, and installation of the rapid change draw bolt assemblies. Both wrench styles are available from Derrick. The ratchet-type, double-ended box wrench allows the nuts to be loosened or tightened very quickly, while the T-handle wrench with a universal joint and socket is sufficient for these operations.

Ratchet Wrench (Part No. PP1116)

T-Handle Wrench (Part No. 5925-01)

Figure 6-2 Rapid Change Draw Bolt Assembly Wrenches

Removal

1. Shut down, lock out, and tag out machine in accordance with Section 4.
2. Using appropriate tool or wrench, loosen nuts on all draw bolts on right side of screen frame in the sequence shown in Figure 6-3. Loosen each nut until fully disengaged from upper threads of draw bolt, with nut between the threaded areas of the bolt.

Note! Right and left sides of the equipment are determined by standing at the feed end and looking toward the discharge end.

3. Loosen all draw bolts on the left side of the screen frame in the same manner as described in step 2.
4. From inside of screen frame, rotate heads of the draw bolts 90 degrees to the unlocked (vertical) position and remove both draw bars.
3. Remove screen panel(s) from bed of screen frame.
4. Following removal of the screen panel, inspect condition of side supports, cross supports, and stringer protectors (refer to Section 5). Replace worn or damaged components, as required, to ensure that screen bed will provide full and even support for the screen.
5. Thoroughly clean any remaining residue or debris from side and cross supports and from stringer protectors before installing replacement screen panel(s).

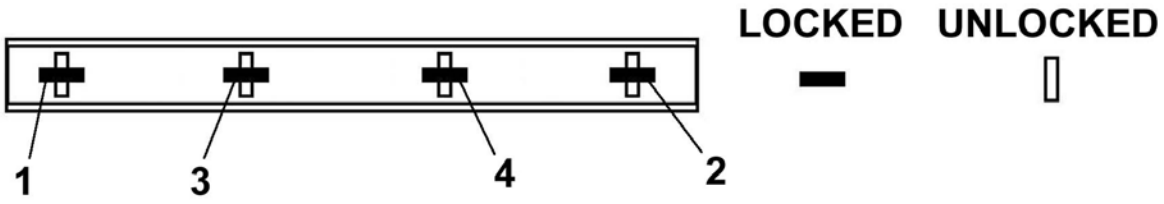

Figure 6-3 Draw Bolt Loosening Sequence

Installation

Locating bars provided along the left interior wall of the screen bed ensure that screen panels are centered left to right on the screen bed. Draw bolts are then engaged and tightened in stages, going from left to right side and finishing with final tensioning on the right side.

Note! Right and left sides of the equipment are determined by standing at the feed end and looking toward the discharge end.

Correct installation of screen panels optimizes screen performance and extends life. To install screen panels, proceed as follows:

1. Before placing screen panel in the screen frame, verify that all components of the screen frame bed are in good condition (refer to Section 5). Replace any worn or damaged components as described later in this section.
2. Place screen panel on bed of screen frame, slide panel into contact with locating bars on left side of screen bed (Figure 6-4), and slide against shoulder of cross support at the feed end of the screen frame.

Note! To ensure proper tensioning and prevent process material from passing beneath screen, the panel must contact the locating bars on the left side of the screen frame and be pulled rearward against the step on the cross support.

3. Verify that all draw bolts are present and in satisfactory condition. Wire brush threads, if necessary, to remove accumulated residue. Replace any distorted, severely corroded, or otherwise damaged draw bolts.
4. Check that draw bars are straight. Remove any accumulated process material from draw bar edge that engages screen panel hook strip.

Installation (Cont'd)

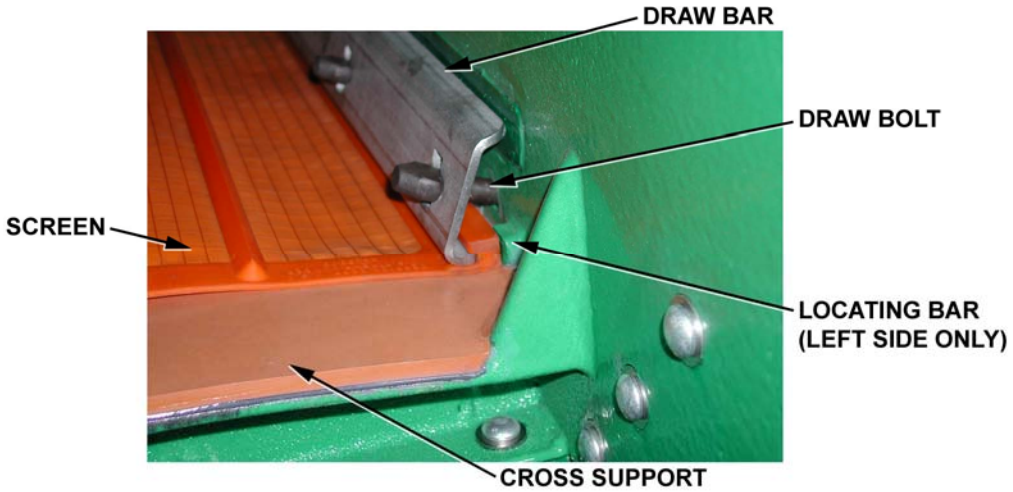

Figure 6-4 Draw Bar Engagement With Hook Strip

5. Confirm that heads of left side draw bolts are oriented in the vertical (unlocked) position.
6. Position draw bar on left side of screen frame to engage hook strip along top outer edge of screen panel, and pass heads of draw bolts through slots in draw bar. Rotate heads of draw bolts 90 degrees to horizontal (locked) position.
7. Lift draw bar slightly to ensure that screen panel is above side support, and hand-tighten left side draw bolt nuts.
8. Repeat steps 5 through 7 on right side of screen frame.

Note! In the following steps the tightening sequence must be followed. Incorrect tightening sequence will cause screen to flutter, resulting in premature wear.

9. Using ratchet or T-handle wrench, tighten the left side draw bolts from outside screen frame in the sequence shown in Figure 6-5.
10. Repeat tightening sequence on right side of screen frame.

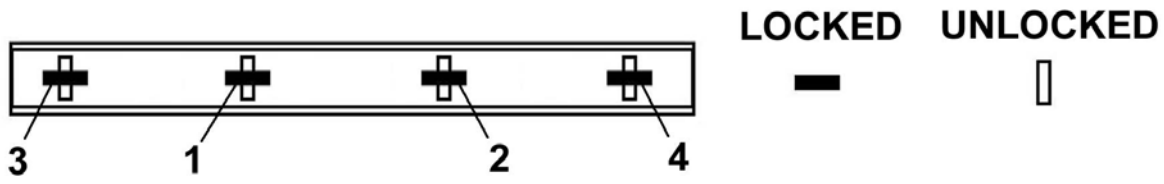

Figure 6-5 Draw Bolt Tightening Sequence

11. After tightening all draw bolts, manually verify that screen panel is correctly positioned, properly tensioned, firmly in contact with screen frame bed, and that ribs are straight and aligned with stringer protectors of adjacent screen frame. When properly tensioned, exposed threads on all draw bolts should be about equal (usually about three threads) as shown in Figure 6-6. Re-adjust panel positioning and re-tension as required.

WARNING! INCORRECT TIGHTENING WILL CAUSE IMPROPER SCREEN PANEL TENSIONING, RESULTING IN PREMATURE WEAR. BE SURE THAT CORRECT TIGHTENING SEQUENCE IS FOLLOWED.

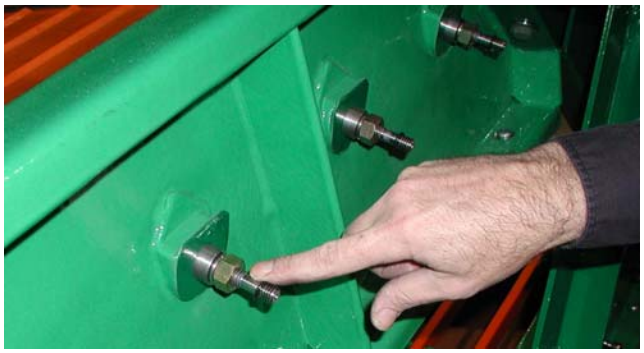

Check for consistent number of exposed threads on all draw bolts.

Figure 6-6 Confirming Proper Screen Panel Installation

INSPECTION, REPAIR, AND PARTS REPLACEMENT

Rapid change draw bolt assemblies should be replaced if inspection reveals distortion, damaged threads, severe corrosion, or galling. If any mounting holes are elongated, contact the Technical Services department for assistance in making the repair(s). Only rapid change draw bolt assemblies in serviceable condition may be installed as shown in Figure 6-7. Replace any draw bolt assembly that cannot be restored to fully serviceable condition.

Draw bars should be inspected for distortion, corrosion, or material buildup. Thoroughly clean draw bars, removing any built-up material on the edge that engages the hook strip on the screen panel. Replace any draw bar that cannot be restored to fully serviceable condition.

Rapid change draw bolt assemblies are available in several different material configurations to accommodate a wide variety of fluid applications. Refer to applicable drawings in Section 8 to determine the components of the draw bolt assemblies installed on your machine.

INSPECTION, REPAIR, AND PARTS REPLACEMENT (CONT'D)

1 - Insert draw bolt through frame from inside.

2 - Install O-ring on bolt.

3 - Push O-ring into counterbore in screen frame.

4 - Apply anti-seize compound to draw bolt threads.

5 - Orient extended washer with counterbored hole toward screen frame, and install on draw bolt.

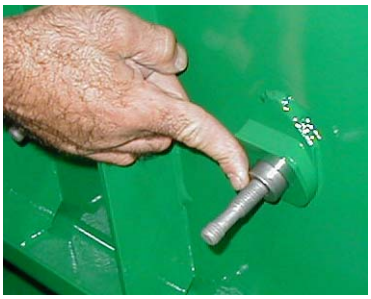

6 - Push in extended washer fully to seat O-ring.

7 - Install lockwasher on draw bolt.

8 - Install nut on draw bolt.

9 - Install O-ring on unthreaded area of draw bolt.

10 - Using wrench, tighten nut until snug*.

* Torque will vary depending on screen panel type and condition of channel protectors and cross and side supports.

Figure 6-7 Rapid Change Draw Bolt Assembly Installation

SECTION 7 - SG VIBRATOR MOTOR

DESCRIPTION

Motion is generated by the vibrator motor(s) and transmitted to the screen frame to separate and convey solids over the screen panels. The SG motor is rated for continuous duty with Totally Enclosed Non-Ventilated (TENV) construction and permanently lubricated sealed bearings. Depending on the screening equipment, one or two motors are installed.

Eccentric weights installed on the rotor shaft produce the motor's vibratory action. The weight, which is measured in in-lbs, varies depending on the application and equipment on which the vibrator motor is installed. The weight is stamped on the motor nameplate. When two vibrator motors are installed on a single screen frame, the motors are connected to cause the motors to rotate in opposite directions to produce linear motion.

The vibrator motors must be operated at their rated three-phase supply voltage. The model designation shown on the nameplate is defined as follows:

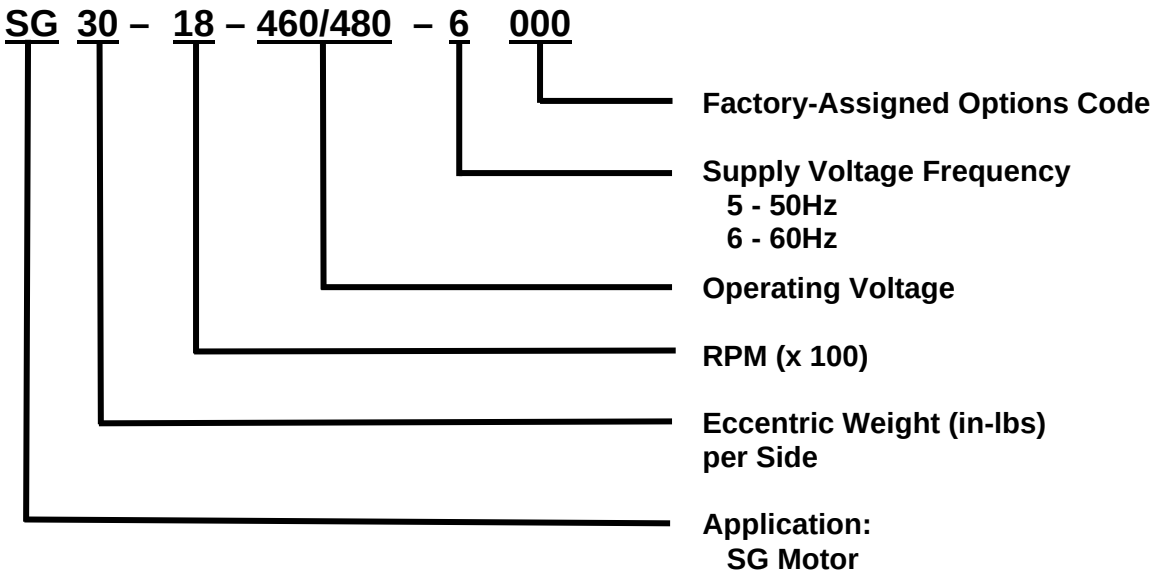

REPAIR RESTRICTIONS

The SG motor is rated as non-explosion proof and, therefore, they may be repaired by the user. During the warranty period, however, the motor should not be opened for any reason. If the motor fails while under warranty, contact the Derrick Service department for assistance. The warranty will be void, if it is determined that the motor has been opened during the warranty period.

Caution! Contact The Derrick Service Department If Motor Fails During The Warranty Period. All Warranties, Whether Stated Or Implied, Will Be Null And Void If The Motor Is Opened During The Warranty Period. Derrick Corporation May Not Be Held Responsible For Any Liabilities Incurred During, Or As A Result Of, Unauthorized Repair Attempts.

SAFETY

Successful and safe operation of Derrick vibrator motors requires proper handling, installation, operation, and maintenance. Failure to follow installation and maintenance requirements may result in personal injury, equipment failure, or property damage.

Only **trained, qualified personnel** should be involved in the installation, operation, and maintenance procedures. **All plant safety procedures must be observed.**

Qualified personnel must be familiar with the construction, installation, maintenance, and operation of the motor and must be aware of any hazards associated with operation of the equipment. In addition, personnel must be trained and authorized to energize, de-energize, clear, ground, and tag circuits and equipment in accordance with established safety practices and be trained in proper use and care of personal protective equipment in accordance with established safety practices.

WARNING! ALL DERRICK VIBRATOR MOTORS MUST BE INSTALLED AND GROUNDED IN ACCORDANCE WITH ALL APPLICABLE ELECTRICAL CODES.

WARNING! TO AVOID SERIOUS PERSONAL INJURY, BE SURE THAT EQUIPMENT IS LOCKED OUT, TAGGED OUT, AND DE-ENERGIZED BEFORE PERFORMING MAINTENANCE AND/OR ADJUSTMENTS.

WARNING! MOTOR HOUSING BECOMES HOT DURING OPERATION AND MAY CAUSE SEVERE BURNS. DO NOT TOUCH MOTOR HOUSING DURING OR IMMEDIATELY AFTER MOTOR HAS BEEN OPERATING.

STORAGE

If a spare motor is to be placed in storage, the instructions in the following paragraphs must be observed to protect the stored motor and maintain the warranty.

New Motors

New spare vibrator motors should be stored in a clean, dry (50 percent relative humidity or less), warm location. The storage location should not undergo severe daily temperature changes.

Used Motors

Before storing a motor that has been in service, run the unit for approximately one hour to ensure complete heating and to dissipate any internal moisture. At the end of the run, shut down the motor and allow it to cool. Follow all applicable lock out and tag out rules when removing the motor.

While motor is in storage, periodically check the integrity of the winding insulation using a megohmmeter. Maintain a continuous record of megohmmeter readings, and immediately investigate any significant decrease in insulation resistance.

OPERATING ENVIRONMENT

Derrick vibrator motors are designed to operate in ambient temperatures slightly higher than 104°F (40°C). If higher temperatures are anticipated, please contact the Derrick Technical Service Department for assistance. **DO NOT install hoods or enclosures** that may cause inadequate ventilation, which could reduce vibrator life.

REPLACEMENT PARTS

The cross-sectional view and parts list below include all available replacement parts for the Derrick SG vibrator motor. This information should be used to identify and order replacement or spare parts for the motor. To simplify parts location, the parts list contains separate part number columns for the SG motor.

SG VIBRATOR MOTOR

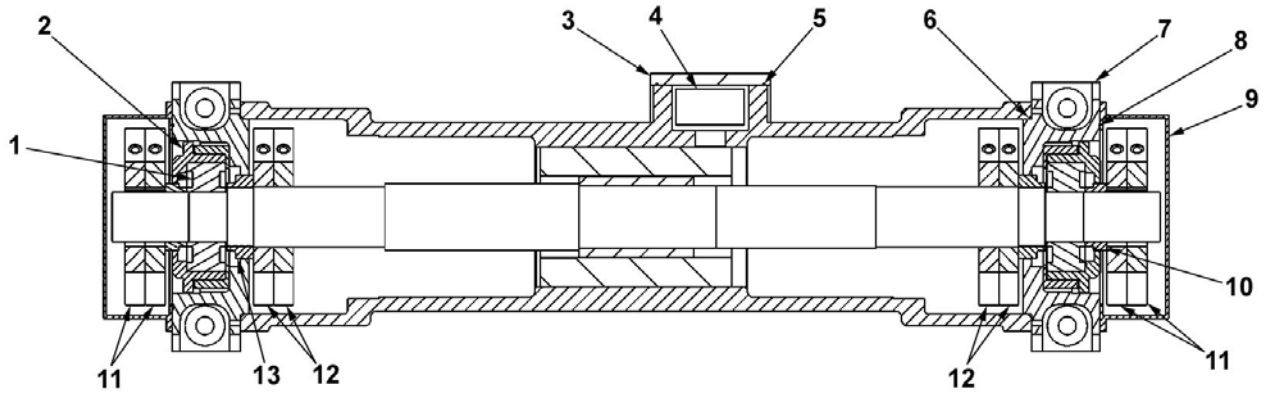

Ref. Dwg. 14274-00

Replacement Parts –SG Motor			
No.	**Description**	**SG Part No.**	**Qty**
1	Bearing	G0001960	2
2	Bearing Mount	14266-01	2
3	Junction Box Cover	12739-00	1
4	Terminal Block Assembly	11006-00-001	1
5	O-Ring, 5.250 x 0.070	G0003627	1
6	O-Ring, 8.250 x 0.094	G0003006	2
7	Bearing Housing	14272-01	2
8	O-Ring, 7.90 x 0.070	PP1503	2
9	End Cover	12736-00-001	2
10	Bearing Spacer	14269-01	2
11	Weights, Outer	Serial Number Required	A/R
12	Weights, Inner	Serial Number Required	A/R
13	Bearing Seat	12735-00-001	2

REMOVAL AND INSTALLATION

The removal and installation procedures below include photos for a typical motor. While motor appearances vary between the models covered, these differences do not affect removal and installation.

Tool Kits

Tool kits containing all necessary equipment for removing and installing motor bolts are available from Derrick. Kit part numbers are as follows:

Part No.	Description
Kit No. G0003029 - 3/4" Hex Hd Bolt	
G0002020	Torque Wrench, 200-600 ft-lbs, 3/4" Drive
G0003026	Extension, 3/4" Drive x 8" Lg
G0003027	Deep Socket, 3/4" Drive x 1-1/8"
G0003028	Box End Wrench, Offset, 1-1/8"
G0003030	Breaker Bar, 3/4"

Safety

Be sure to follow the warnings listed below before, during, and after removal or installation of the vibrator motor.

⚠	**WARNING! MOTOR HOUSING BECOMES HOT DURING OPERATION AND MAY CAUSE SEVERE BURNS. DO NOT TOUCH MOTOR HOUSING DURING OR IMMEDIATELY AFTER MOTOR HAS BEEN OPERATING.**
⚠	**WARNING! SCREEN PANELS WILL BE DAMAGED IF STRUCK BY HARDWARE OR TOOLS. EITHER REMOVE SCREEN PANELS OR PROTECT FROM DAMAGE DURING MOTOR REMOVAL OR INSTALLATION.**
⚠	**WARNING! BE SURE THAT HANDLING DEVICES HAVE SUFFICIENT LIFTING CAPACITY TO SAFELY HANDLE THE WEIGHT OF THE EQUIPMENT.**
⚠	**WARNING! HIGH VOLTAGE MAY BE PRESENT. ALWAYS OPEN FUSED DISCONNECT SUPPLYING ELECTRIC POWER TO THE EQUIPMENT, AND LOCK-OUT AND TAG-OUT POWER SUPPLY BEFORE PERFORMING ANY MAINTENANCE AND/OR ADJUSTMENTS OF EQUIPMENT.**
⚠	**WARNING! MOTOR MAY BE DAMAGED BY STORING IN A HIGH HUMIDITY ENVIRONMENT (GREATER THAN 50% RH). OUT-OF-SERVICE MOTOR(S) MUST BE STORED IN A LOW-HUMIDITY ENVIRONMENT.**

Motor Handling

When lifting motor, position lifting sling at the center of the motor case as shown.

DO NOT PINCH MOTOR POWER CORD WHEN INSTALLING LIFTING SLING. To prevent damage to power cord when lifting motor assembly, always keep sling next to motor case.

During Motor Removal:

Attach lifting sling to motor case, and connect to overhead lifting device ***before*** removing mounting hardware for motor assembly.

During Motor Installation:

Keep lifting sling attached to motor until mounting hardware has been installed and secured to screen frame.

Mounting Hardware Installation

Note! Due To High Torque Applied During Installation, Re-Use Of Motor Mounting Hardware Is Not Recommended. All Hardware Components Should Be Replaced Whenever A Motor Is Removed.

The motors are secured to the screen frame with 3/4” hex head bolts. Hardware information is listed below. When installing the bolts, note that the 3/4” motor bolts are installed from the underside of the screen frame (Figure 7-1). Hardened washers are required under the bolt heads, as well as under the Flex-Loc nuts.

Part No.	Dimensions	Bolt Head	Nut Size / Wrench	Photo
G0001973	3/4” x 4” Lg	1-1/8” Hex Hd	1-1/8” / Deep Socket	

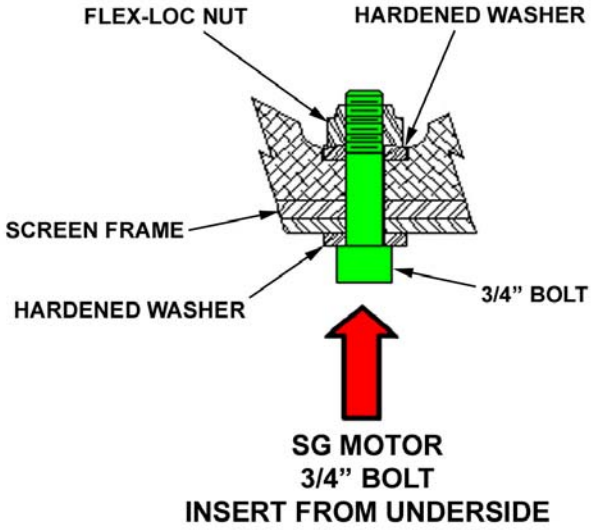

Figure 7-1 Motor Bolt Installation

Motor Positioning and Mounting

1 - Using overhead lifting device, position vibrator motor over screen frame.

2 - Position motor on screen frame and align mounting holes with screen frame. Insert bolts (without anti-seize compound applied) with hardened washers through motor holes from underside of screen frame. Install hardened washers and Flex-Loc nuts on top, and tighten to 300 ft-lbs.

ELECTRICAL CONNECTIONS

The following instructions describe the connections at both ends of the power cord. To ensure that correct connections, always tag leads for identification before disconnecting from the terminals.

The Derrick vibrator motor must be operated at the required voltage and frequency. Refer to the data plate on the motor case for the motor's voltage and frequency requirements. Prior to installing a new vibrator motor, verify that the electrical power configuration corresponds to the electrical requirements specified on the motor.

Safety

Electrical connections should be performed only by trained, qualified personnel familiar with high-voltage applications and knowledgeable of National Electrical Code (NEC) standards and any other state or local codes that may apply to installation of industrial equipment.

⚠	**WARNING! MOTOR MAY BE DAMAGED BY INCORRECT SUPPLY POWER. BE SURE THAT VOLTAGE AND FREQUENCY ARE WITHIN ±10% OF MOTOR DATA PLATE SPECIFICATIONS.**
⚠	**WARNING! ELECTRICAL CONNECTIONS MUST BE MADE IN ACCORDANCE WITH THE NATIONAL ELECTRICAL CODE (NEC) AND ALL APPLICABLE LOCAL CODES. FAILURE TO COMPLY MAY RESULT IN AN UNSAFE CONDITION THAT COULD INJURE PERSONNEL OR DAMAGE EQUIPMENT. ENSURE THAT ALL ELECTRICAL AND CONDUIT CONNECTIONS ARE SECURE.**
⚠	**WARNING! EITHER REMOVE SCREEN PANELS OR PROTECT FROM DAMAGE DURING MOTOR REMOVAL OR INSTALLATION.SCREEN PANELS WILL BE DAMAGED IF STRUCK BY HARDWARE OR TOOLS.**

⚠	**WARNING! HIGH VOLTAGE MAY BE PRESENT. ALWAYS OPEN FUSED DISCONNECT SUPPLYING ELECTRIC POWER TO THE EQUIPMENT, AND LOCK OUT AND TAG OUT POWER SUPPLY BEFORE PERFORMING ANY MAINTENANCE AND/OR ADJUSTMENTS OF EQUIPMENT.**
⚠	**WARNING! MOTOR MAY BE DAMAGED IF STORED IN A HIGH-HUMIDITY ENVIRONMENT (GREATER THAN 50% RH). BE SURE THAT MOTOR WAS STORED IN A LOW-HUMIDITY ENVIRONMENT.**
⚠	**WARNING! BE SURE THAT MOTOR IS PROPERLY GROUNDED.**
⚠	**WARNING! MOTOR HOUSING BECOMES HOT DURING OPERATION AND MAY CAUSE SEVERE BURNS. DO NOT TOUCH MOTOR HOUSING DURING OR IMMEDIATELY AFTER MOTOR HAS BEEN OPERATING.**

Connections to Motor

The procedure below describes motor cord connections to the motor. If replacing a cable, tag all leads for identification before disconnecting old cable. The SG motor uses either of the following connection styles:

Terminal Block - Cord is fed through the side of the motor junction box and connected to a terminal block inside the junction box

Power Connector - Cord is fed through the junction box cover, which contains a female power connector where connections are made. This connector plugs into a male plug in the junction box.

Terminal Block Style

1. Remove cover from motor junction box.
2. Carefully feed the wires through the elbow installed in the motor junction box (Figure 7-2).
3. Install and tighten gland assembly components in elbow, using care to avoid over-tightening backnut. To prevent over-tightening, stop tightening backnut when red seal begins to swell.
4. Install two O-rings over leads inside junction box, slide both O-rings into threaded hole in box, and position one O-ring at each end of threaded hole to suspend the leads in the center of the hole.

ℹ	**Note! Be sure that O-rings are properly installed, as they prevent chafing of leads due to abrasion against threaded hole.**

5. Route leads as shown, dressing carefully to prevent leads from contacting each other or the interior of the connection box.
6. Secure black, white, red, orange, and blue leads to studs as marked on terminal block using external tooth lockwashers and Flex-Loc® nuts. Secure green lead to GROUND terminal using lockwasher and screw.
7. Apply RTV-108-10.1 silicone sealant to leads (Figure 7-3) for vibration-proofing. Also, be sure to fill threaded hole for additional protection against chafing.
8. Place cover on motor junction box, and install and tighten four screws to 250 in-lbs.

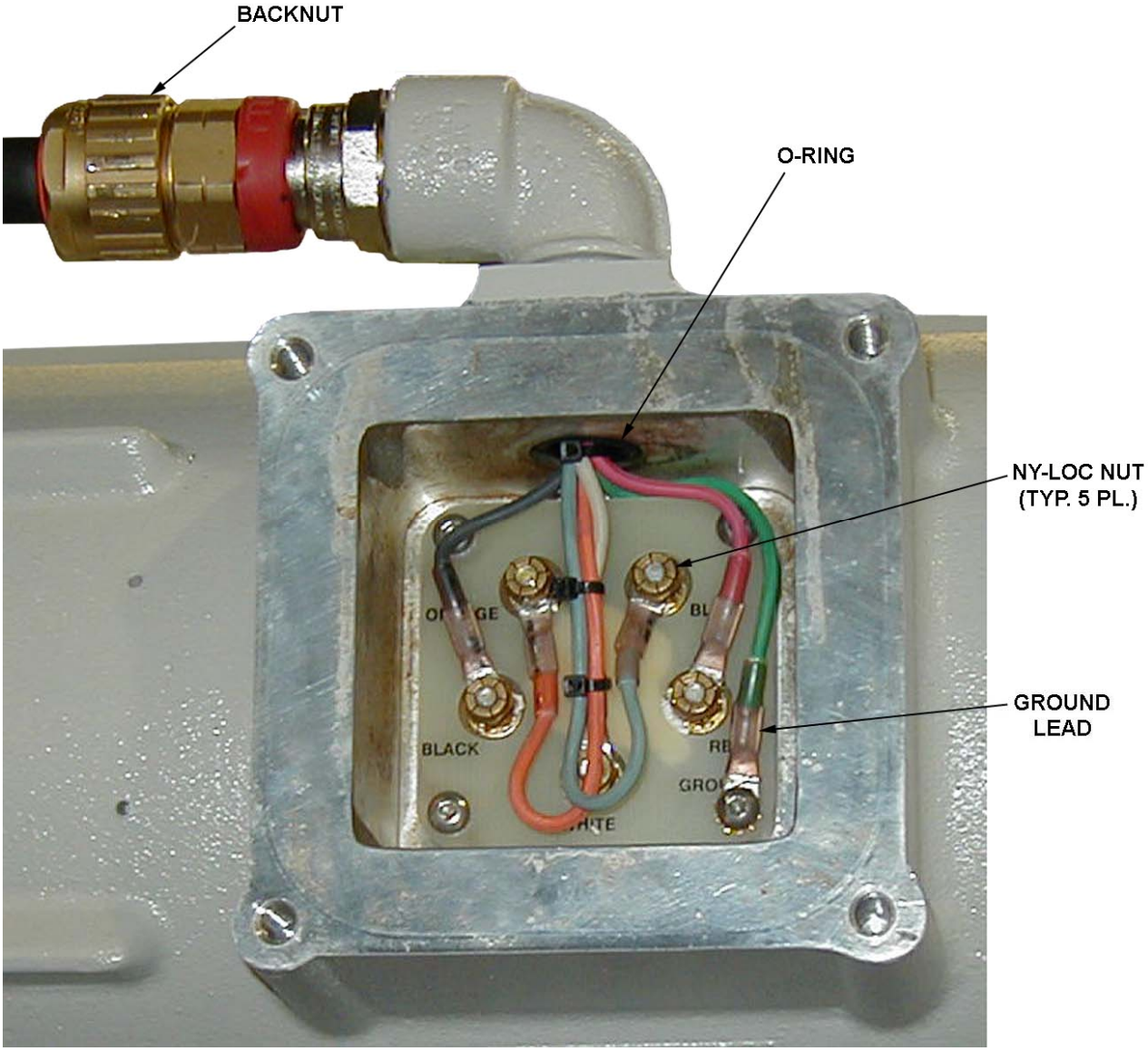

Figure 7-2 Motor Cord Connections to Terminal Block

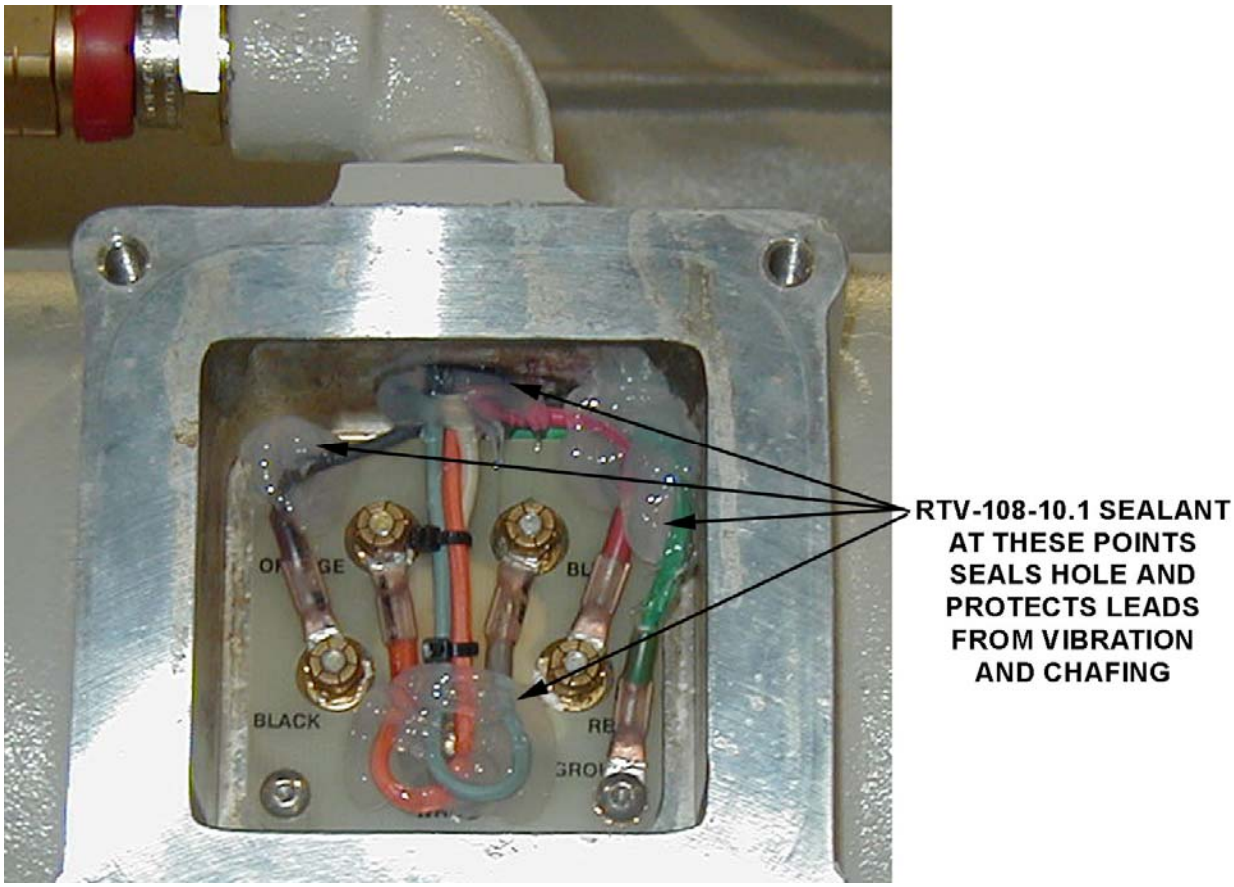

Figure 7-3 RTV Sealant Application

Power Connector Style

1. Remove cover from motor junction box, and discard O-ring (Figure 7-4).
2. Insert motor cord leads through junction box cover.
3. Match leads to power connector markings, and connect leads to terminals as shown.
4. Apply anti-seize compound to front gland nut, and install and tighten in threaded opening in cover.
5. Install remaining gland components, and tighten backnut only sufficiently to cause red seal to begin to protrude. Do not over-tighten backnut.

Power Connector Style (Cont'd)

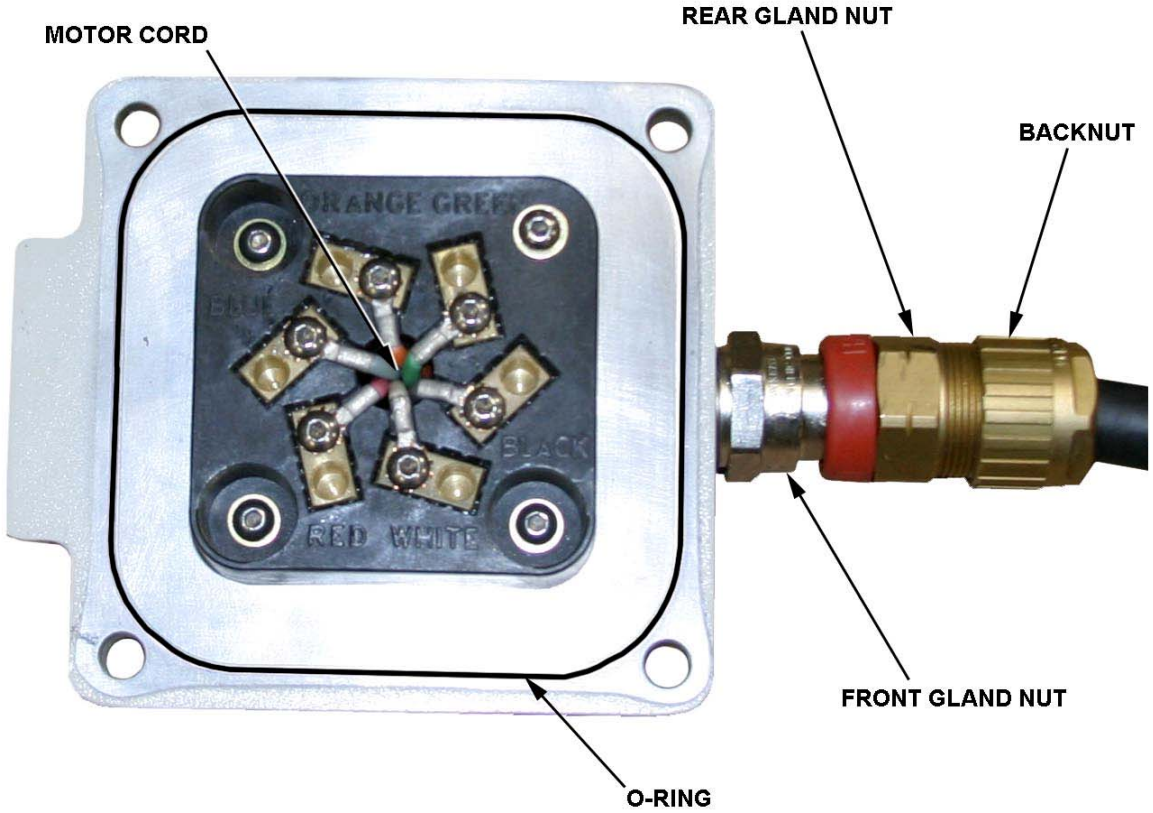

Figure 7-4 Motor Cord Connections to Power Connector

6. Apply small amount of LubriPlate 5555, part number L0107-007, or UL-approved equivalent, to new O-ring and install O-ring in groove of cover.
7. Align cover mounting holes with holes in junction box, ensure that O-ring remains in place, and install cover by engaging power connector plug and receptacle.

Note! Be sure that connector halves mate easily and that O-ring remains in place during assembly.

8. Secure cover to junction box with four socket head cap screws, and tighten to 250 in. lbs.
9. Check for proper fit between cover and junction box surface by attempting to insert a 0.001" shim between the two parts around the entire mating area circumference. If the shim can be inserted at any location, remove the cover and correct any defect.

Connections To Equipment Junction Box

Motor leads are connected to a terminal block inside a rectangular junction box (Figure 7-5). Before disconnecting old cable, tag all leads for identification. Refer to the schematic diagram in Section 8 to confirm proper connections.

1. Pass leads into junction box, and thread front gland nut into junction box and tighten securely.
2. Thread and tighten rear gland nut onto front gland nut.
3. Thread and tighten backnut onto rear gland nut.
4. Insert wire colors into proper locations on terminal block as shown, noting that leads from one motor are reversed. Tighten terminal screws to secure leads.

Note! Be sure to connect one motor in reverse polarity so that motors rotate in opposite directions.

Motor Thermal Switch Connections

If desired, the thermal switch embedded in the motor's stator winding may be connected to turn on an indicator to inform personnel that the motor is operating within the normal temperature range. Alternatively, the switch may be connected to an overload protection device in the motor starter box to shut down the motors in case of high stator temperature. To permit connection to an external device, the blue and orange leads from the thermal switch are brought out to terminals P1 and P2 in the equipment electrical junction box. To wire the thermal switch, connect leads from the external indicator and power source to terminals P1 and P2 in the junction box.

If the stator temperature becomes abnormally high, the normally closed (N.C.) thermal switch contacts open. Depending on the connection scheme, the open contacts either turn off the indicator or shut down the motor(s). The indicator and power source are customer-supplied.

Motor Test

After completing the electrical connections, test the motor to confirm proper operation. For dual-motor installations check that motors rotate in opposite directions. Reverse the leads of one motor to correct the direction of rotation, if necessary.

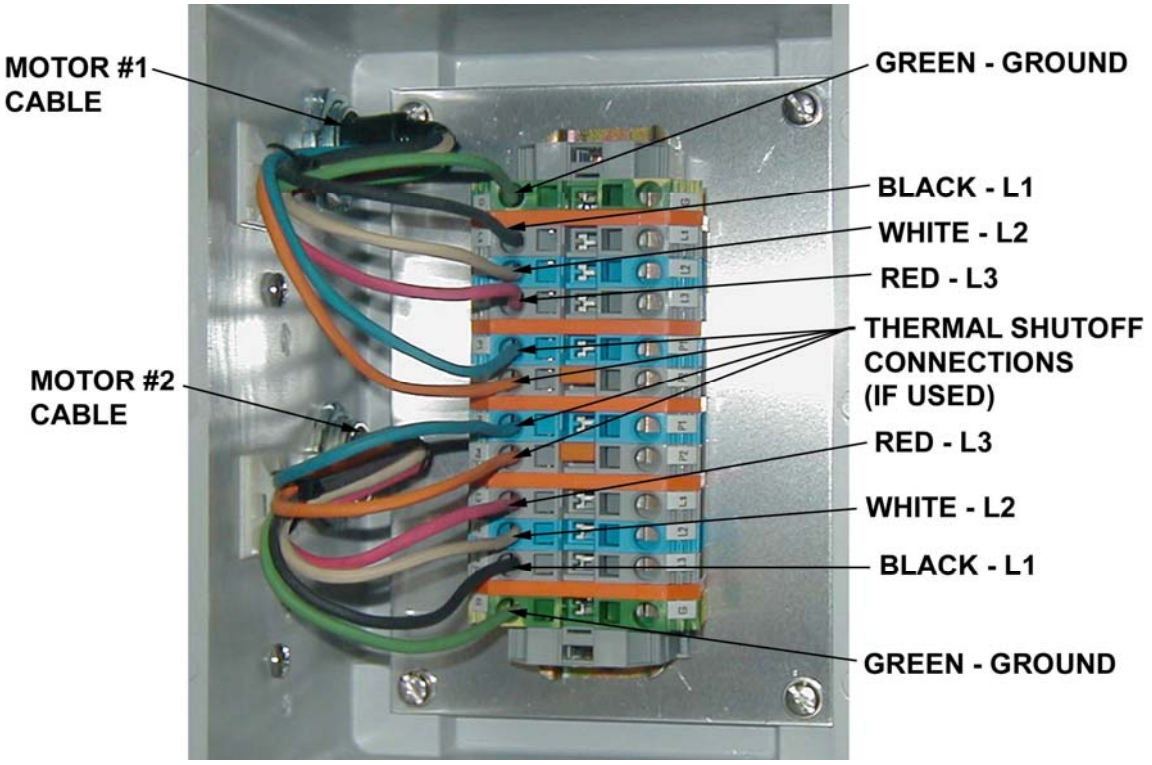

Dual Motor

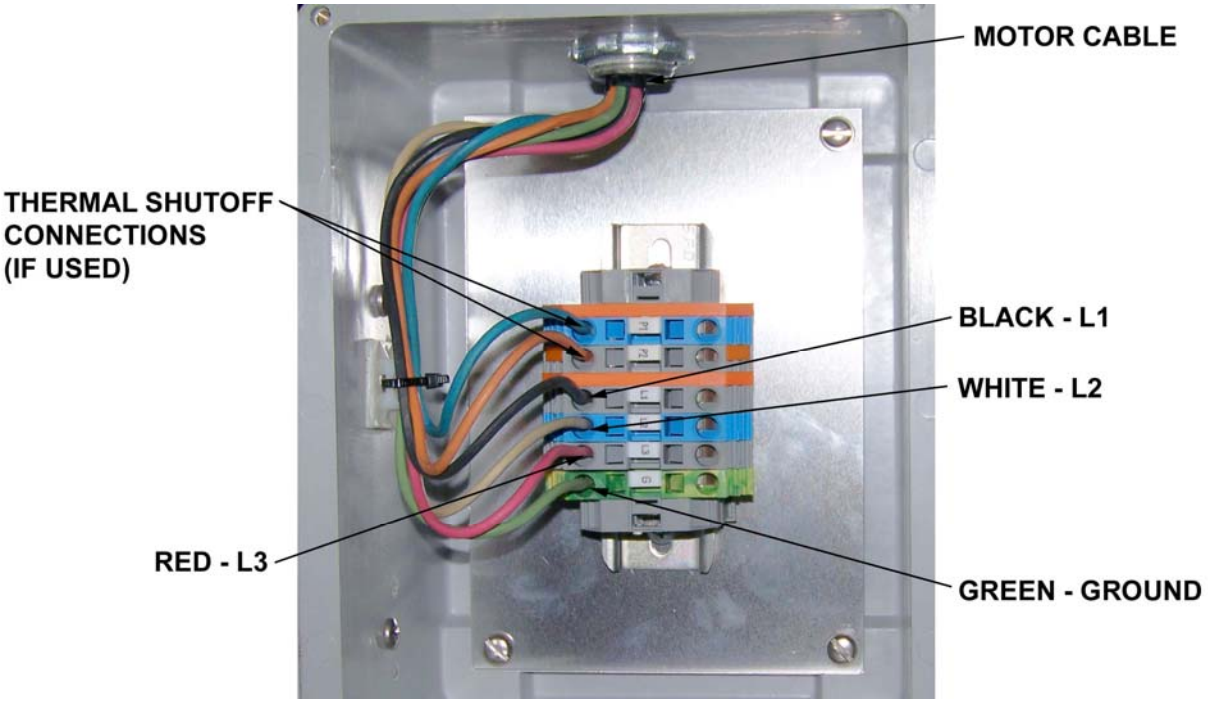

Single Motor

Figure 7-5 Junction Box Electrical Connections

PREVENTIVE MAINTENANCE

Routine preventive maintenance will ensure maximum life for the vibrator motor. While the maintenance schedule in this section is flexible, modifications should be based on operating experience at your facilities.

A maintenance log will help establish and monitor a service schedule that is correct for your equipment. The maintenance log should contain the following information:

- Motor model and serial number from motor data plate
- Power requirements
- Voltage reading across L1 to L2, L1 to L3, and L2 to L3
- Amperage reading across L1 to L2, L1 to L3, and L2 to L3

WARNING! TO AVOID SERIOUS PERSONAL INJURY BE SURE EQUIPMENT IS LOCKED OUT, TAGGED OUT, AND DE-ENERGIZED PRIOR TO PERFORMING MAINTENANCE AND/OR ADJUSTMENTS.

VIBRATOR MOTOR MAINTENANCE	
Maintenance Action	**Frequency**
Using a water hose, clean process material from exterior of motor case*.	Daily or as required
Inspect motor cable for signs of deterioration or damage.	Each shift or as required
Using a torque wrench; verify that motor mounting bolt torque is in accordance with torque listed in Motor Removal and Installation.	After first 40 hours of operation; once each year

* *The vibrator motor is designed to dissipate heat through the motor case. Buildup of process material on the motor case exterior prevents proper heat dissipation and may cause the motor to overheat.*

BEARING REPLACEMENT

The following bearing replacement procedure applies only to SG motors that are no longer under warranty. During the warranty period the motor is not to be opened for any reason, as this will void the warranty. Contact the Derrick Service department for assistance if a motor fails while under warranty.

NOTE! All warranties, whether stated or implied, will be void if the Derrick motor is opened during the warranty period.

Materials Required

The bearing replacement kits shown below contain the bearings and associated components required for both ends of the motor. Derrick recommends replacement of bearings as a set. Failure to replace both bearings may result in premature failure of the newly installed bearing.

NOTE! Bearings in Derrick vibrator motors are custom designed with loose internal clearances and are packed with Mobilith SHC® 100 grease to prolong life. Regardless of supplier, bearings must be packed with this grease or equivalent. Derrick does not recommend use of bearings from an alternative supplier.

SG MOTOR BEARING REPLACEMENT KITS		
Part Number	**Description**	**Qty**
Bearing Replacement Kit - G0003904		
G0001696	Bolt, Jack, Hex Skt Hd, M8-1.25 x 70mm, Aly Stl	2
G0001960	Bearing, Vibrator	2
PP1503	O-Ring, 7.90 ID x .070 Cross Section, Viton	2
14266-01	Mount, Bearing, Vibrator, A4140 Stl	2
G0002250	Grease, Vibrator, SCH-100, 10-Oz. Tube	1
Bearing Replacement Kit With Tools - G0003905		
G0001696	Bolt, Jack, Hex Skt Hd, M8-1.25 x 70mm, Aly Stl	2
G0001960	Bearing, Vibrator	2
PP1503	O-Ring, 7.90 ID x .070 Cross Section, Viton	2
14266-01	Mount, Bearing, Vibrator, A4140 Stl	2
G0001698	Torque Wrench, 3/8” Drive, 150 to 750 In Lb	1
G0008935	Driver, Hex, 6mm Male, 6.063 L X 3/8” Drive	1
G0001700	Wrench, Hex, T-Handle, 5mm Alloy Stl	1
G0003126	Wrench, Ratchet, 3/8” Drive, Ind. Finish	1
G0008317	Socket, Allen Bit, 5mm Lg, 3/8” Drive	1
G0002250	Grease, Vibrator, SCH-100, 10-Oz. Tube	1

Tools Required

Following is a recommended tool list for use during the bearing replacement procedure:

- Torque wrench (200 to 1000 in lbs)
- Hex wrench (5mm)
- Hex wrench (6mm)
- Dental pick or similar tool
- Clean, absorbent cloths
- Safety glasses
- Heat-resistant gloves (250° F or higher)
- Welder's torch
- Bearing heater

Work Area Environment

A well-lighted area with sufficiently large work-surface area is required to work on the motor. The work surface should be clean to prevent contamination of the new bearings and motor interior.

Safety

The following WARNINGS apply to the bearing replacement procedure. Be sure to read and understand these WARNINGS **before** proceeding.

	WARNING! MOTOR HOUSING BECOMES HOT DURING OPERATION AND MAY CAUSE SEVERE BURNS. DO NOT TOUCH MOTOR HOUSING DURING OR IMMEDIATELY AFTER MOTOR HAS BEEN OPERATING.
	WARNING! ALL OPERATING AND MAINTENANCE PERSONNEL MUST READ AND UNDERSTAND ALL SAFETY INFORMATION IN THIS MANUAL BEFORE WORKING WITH THE EQUIPMENT.
	WARNING! HIGH VOLTAGE MAY BE PRESENT. BE SURE FUSED DISCONNECT SUPPLYING ELECTRIC POWER TO THIS EQUIPMENT IS OPEN. LOCK OUT AND TAG OUT POWER SUPPLY TO PREVENT ACCIDENTAL APPLICATION OF POWER WHILE MAINTENANCE AND/OR ADJUSTMENTS ARE IN PROGRESS.
	WARNING! TO PREVENT SERIOUS EYE INJURY OR PERMANENT LOSS OF VISION, WEAR SAFETY GLASSES DURING THIS PROCEDURE.

Bearing Replacement

The procedure below describes replacing bearing on one end. Repeat the procedure for the second bearing.

NOTE! Remove vibrator motor from equipment before performing bearing replacement (refer to Motor Removal and Installation). Bearings will fail prematurely if new bearings become contaminated during replacement.

Bearing Removal

The following procedure describes bearing removal for one side of the motor. Repeat the procedure for bearing at opposite end.

1 - Using a 5mm hex wrench, remove eight socket head cap screws securing cover to bearing housing; support cover as last screw is removed.

2 - Remove cover, and remove O-ring using a dental pick or similar tool. Discard O-ring.

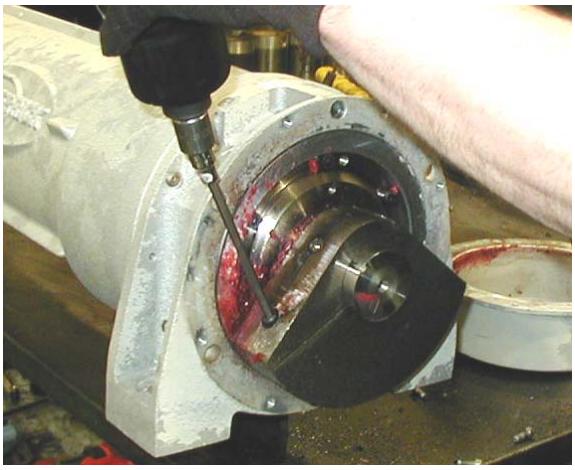

3 - Using a 6mm hex wrench, loosen socket head set screw securing outboard eccentric weight(s) to motor shaft. Note that more than one eccentric weight may be installed in this position.

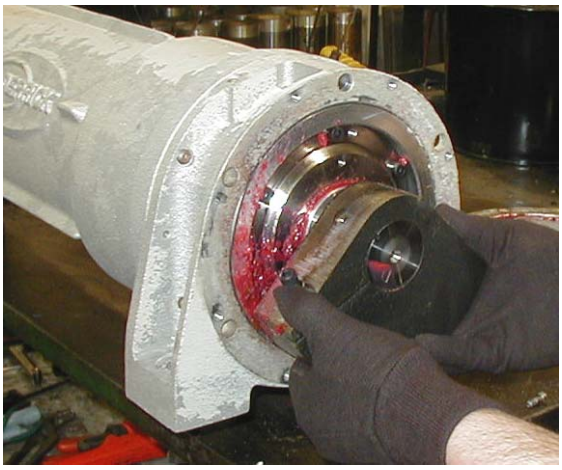

4 - Remove outboard eccentric weight(s) from motor shaft.

5 - Using a soft absorbent cloth, remove excess lubricant from components. Do not use compressed air for cleaning as this may drive contaminants into motor.

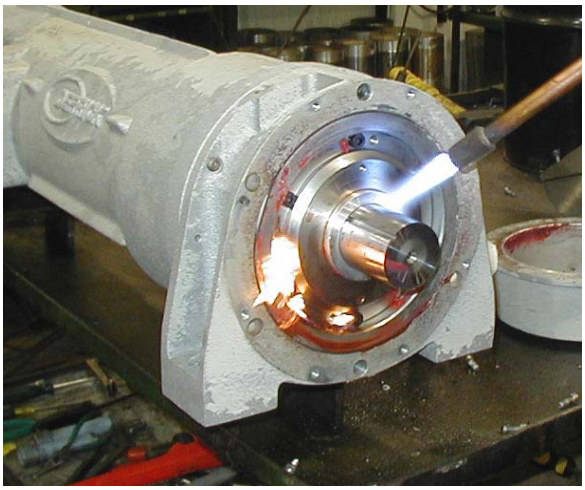

6 - Using a torch with a diffused flame, gently heat spacer for no more than 10 seconds to approximately 200°-230°F (93°-110°C) to facilitate removal.

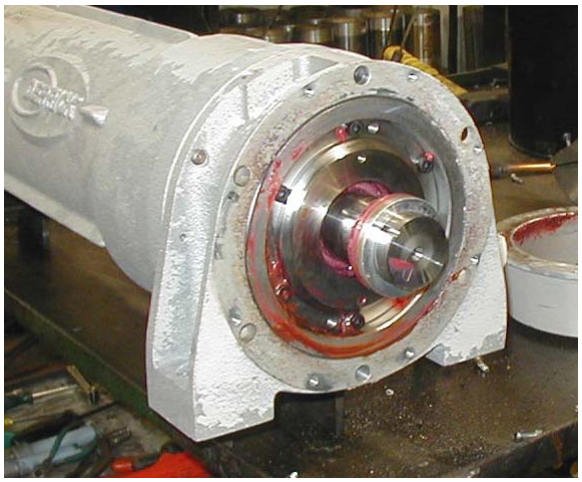

7 - CAREFULLY slide heated spacer off motor shaft.

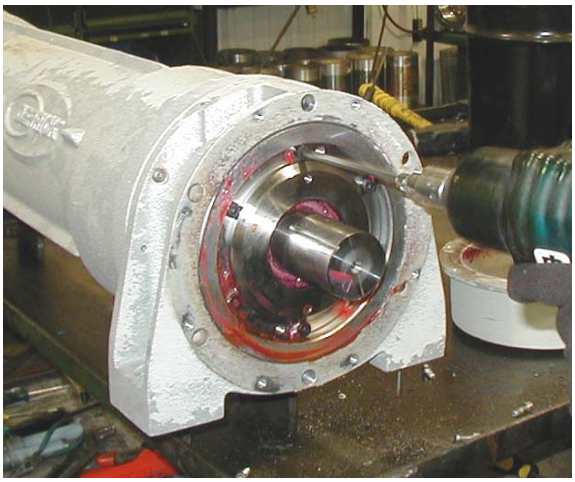

8 - Using a 6mm hex wrench, remove six socket head cap screws (M8-1.25x60) securing bearing mount to bearing housing.

Bearing Removal (Cont'd)

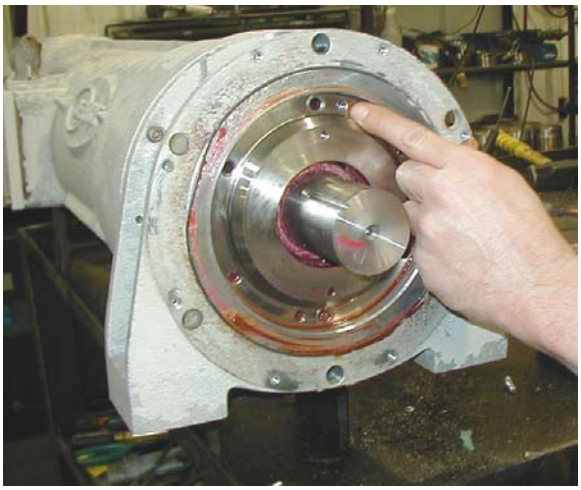

9 - Locate two threaded holes that accept the two M8-1.25x70 socket head jack screws. Jack screw holes are 180 degrees apart.

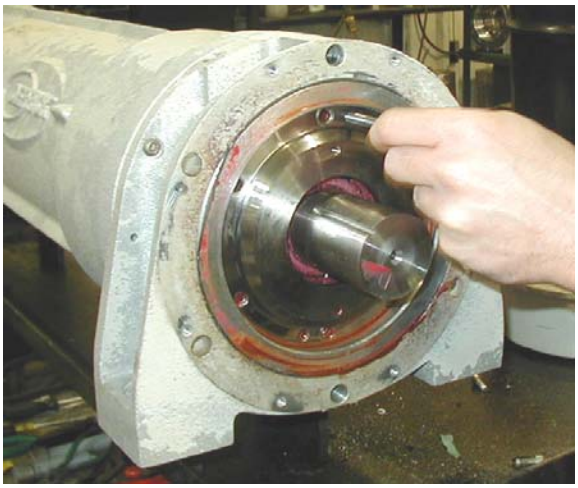

10 - Carefully thread jack screws into threaded holes in bearing mount, being sure to avoid cross-threading.

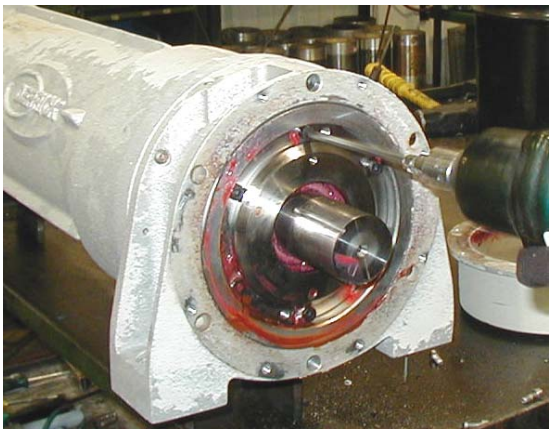

11 - Using a 6mm hex wrench, alternately and equally advance each jack screw a few turns at a time.

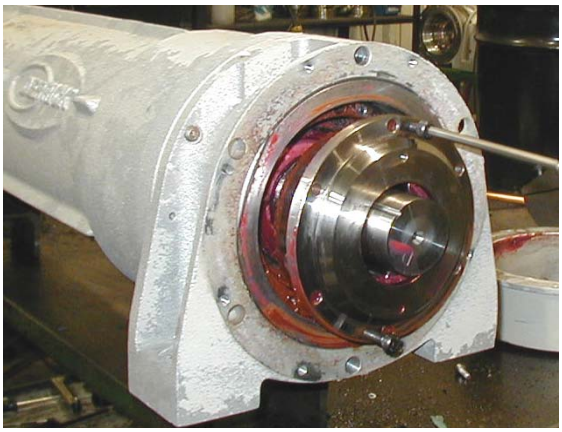

12 - As jack screws contact bearing housing, bearing mount is drawn from bearing housing as shown, while inner bearing race remains on shaft. Remove and discard bearing and bearing mount.

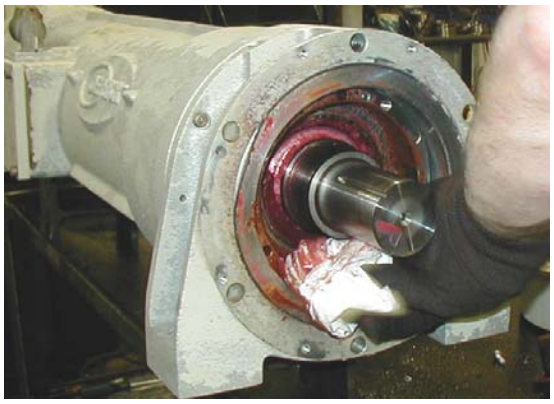

13 - Using a soft absorbent cloth, remove excess lubricant from interior of bearing housing and inner bearing race. Do not use compressed air for cleaning as this may drive contaminants into motor.

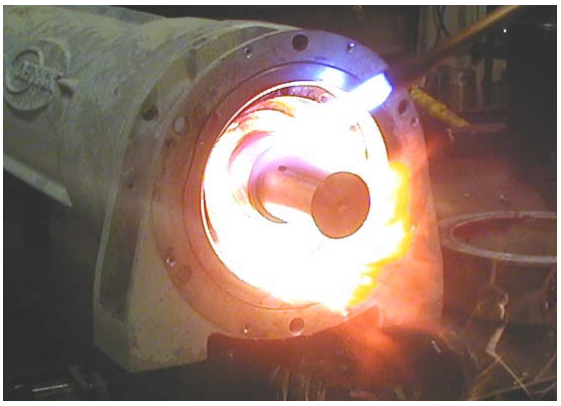

14 - Using a torch with a diffused flame, gently heat inner bearing race for no more than 10 seconds to approximately 200°-230°F (93°-110°C) to facilitate removal.

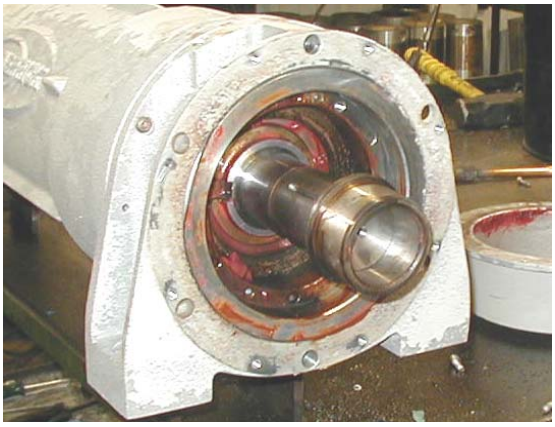

15 - Carefully remove and discard heated inner bearing race from motor shaft. Using a soft absorbent cloth, remove excess lubricant from interior of bearing housing. Do not use compressed air for cleaning as this may drive contaminants into motor.

Bearing Installation

The following procedure describes installation of the bearing on one end of the motor. Repeat the procedure for the second bearing.

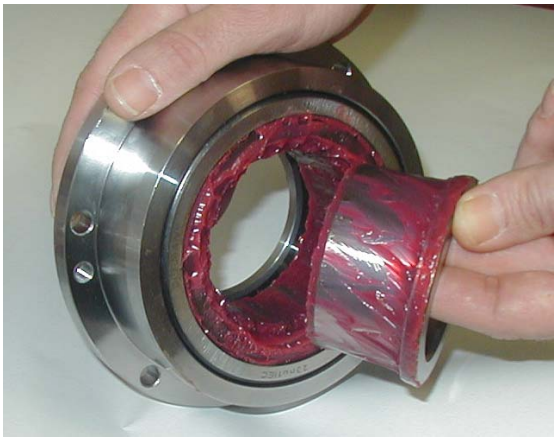

1 - Remove inner bearing race from assembled bearing and bearing mount supplied with bearing replacement kit. Be careful to avoid contaminating these components.

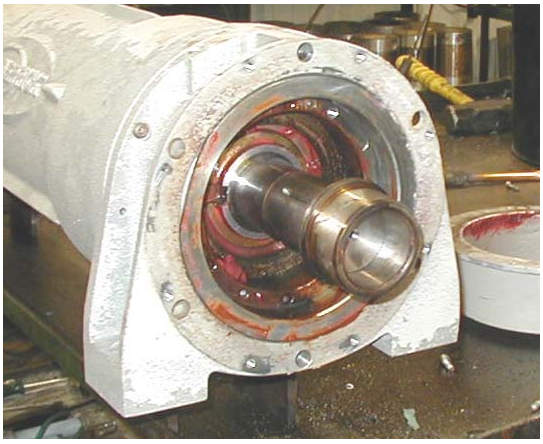

2 - Wipe excess lubricant from inner bearing race, and position on motor shaft with collar toward motor body. Using a bearing heater or a torch with a diffused flame, heat inner bearing race to approximately 200°-230° F (93° - 110° C).

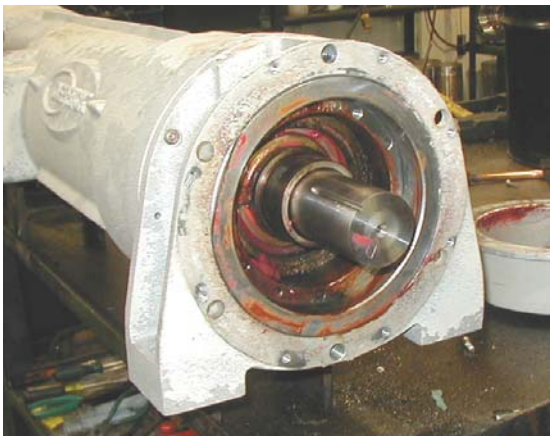

3 - After heating inner bearing race, slide bearing race onto motor shaft until shoulder of race contacts bearing seat in rear of cavity. Fully coat surface of inner race with grease (supplied with bearing replacement kit).

4 - Orient longer, reduced diameter of bearing mount toward motor body. Align clearance holes in bearing mount with threaded holes in bearing housing, and press bearing mount fully into bearing housing cavity.

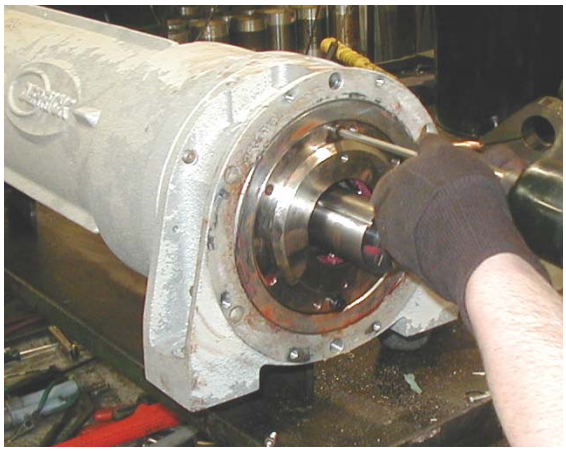

5 - Locate the two clearance holes in bearing mount 180degrees apart. Insert two M8-1.25x70 jack bolts supplied with bearing replacement kit through the clearance holes, and thread screws into holes in bearing housing. Alternately advance both jack bolts a few turns at a time until bearing mount is drawn well into bearing housing.

6 - After bearing mount has been sufficiently drawn into bearing housing, remove the two jack bolts and install original socket head cap screws (M8-1.25x60) into the six clearance holes. Hand tighten screws.

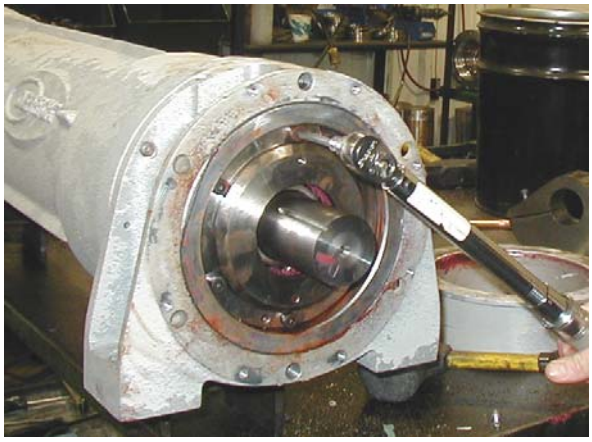

7 - Using a torque wrench and 6mm hex bit, alternately tighten all six cap screws to 250 in. lbs. Coat motor shaft with grease (included in bearing replacement kit).

8 - Using a bearing heater or torch with a diffused flame, gently warm spacer (no more than 10 seconds) to approximately 200°-230°F (93°-110 C). Slide heated spacer into contact with bearing.

Bearing Installation (Cont'd)

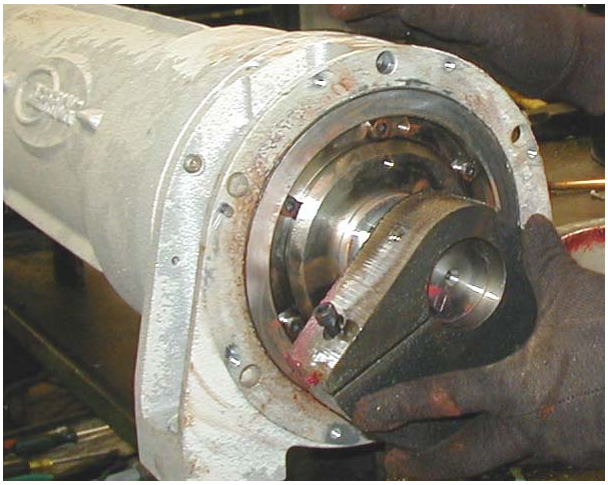

9 - Orient eccentric weight(s) with split facing junction box and pin on inside of weight aligned with keyway of motor shaft. If two weights are used, install heaviest weight closest to bearing mount.

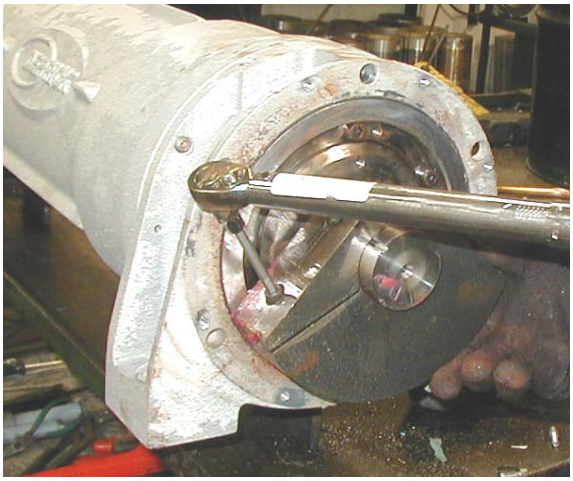

10 - Using a torque wrench and 6mm hex bit, tighten M8 cap screw to 250 in. lbs.

11 - Check rotation and axial play of motor shaft as follows:

a. Manually rotate the eccentric weight both clockwise and counterclockwise, allowing weight to fully rotate. If binding is felt, disassemble motor as necessary to determine cause of binding, correct defect, and reassemble bearing in accordance with this procedure.

b. Using both hands, grip eccentric weight(s) and push and pull along axial centerline of motor assembly. Shaft must have no more than 1/16"-1/8" (1.6-3.2 mm) of movement. If excessive axial movement is found, disassemble motor as necessary to determine cause of problem, correct defect, and re-assemble bearing in accordance with this procedure.

12 - Apply a small amount of grease to O-ring groove between bearing housing and bearing mount, and then **carefully** install O-ring in groove.

DO NOT STRETCH O-RING DURING INSTALLATION.

Position cover on motor case, and install six M6-1.0 x 16 screws hand tight. Using a torque wrench and a 5mm hex bit, tighten screws to 115 in. lbs.

TROUBLESHOOTING

The troubleshooting procedures presented in the following chart are designed to assist in fault isolation and correction of defects in Derrick SG vibrator motors.

Trouble	Possible Cause	Corrective Action
Motor fails to run	Incorrect voltage	Check that supply voltage agrees with motor data plate. If correct, check fuses / circuit breakers. Using a voltmeter, check for correct supply power to all three phases at starter(s). Using a voltmeter, verify that motor starter is functioning properly and terminals T-1, T-2, and T-3 are energized. Check for damage to power cable connected to motor junction box. Correct all defects.
	Incorrect power supply connections	Check electrical connections, and correct any defects.
Starter circuit overloads and trips	Incorrect supply voltage	Check that supply voltage agrees with motor data plate.
	Incorrect thermal overload	Check that thermal overload is capable of handling full load current. Replace overload, if inadequate (see motor data sheet for load data).
	Mounting hardware loose	Check that mounting hardware is properly tightened.
	Vibrating motion of motor and related components are restricted	Check that shipping brackets have been removed or disengaged as required. Check condition of float mounts. Verify that solids are not preventing motion of the screen frame. Correct all defects.
Excessive current draw	Incorrect supply voltage	Verify that supply voltage agrees with motor data plate.
	Incorrect thermal overload	Check that thermal overload is capable of handling full load current. Replace overload, if inadequate (see motor data sheet for load data).
	Mounting hardware loose	Check security of mounting hardware. Tighten as required.
	Vibrating motion of motor and related components restricted	Verify that shipping brackets have been removed / disengaged as required. Verify that float mounts are in good condition. Verify that solids are not preventing motion of the screen frame. Correct all defects.
Surface temperature too high*	Excessive buildup of process material on motor case	Wash off buildup from motor case.

SG VIBRATOR MOTOR

Trouble	Possible Cause	Corrective Action
Excessive noise	Loose hardware	Check security of all external and internal hardware. Tighten as required.
	Defective bearing	Replace both bearings in accordance with Bearing Replacement.
Motor turns too slowly	Incorrect supply voltage or line frequency	Check that supply voltage and line frequency agree with motor data plate. Frequency must be within ±1Hz.
Motors not synchronized (dual motors only)	No electric power to one motor	Check that supply voltage is connected to both motors.
	Incorrect electrical connections	Confirm that electrical connections are in accordance with the instructions in this section.

* Derrick vibrator motors run with higher surface temperatures than standard industrial motors. Refer to the maximum temperature rise indicated on the motor data plate attached to the motor case or the motor data sheet included in this manual.

DERRICK® CORP. - MOTOR DATA SHEET

DOC# PE-S-255-06

Wire Code

Power	Black, White & Red
Ground	Green
Thermal Switch	Orange & Blue

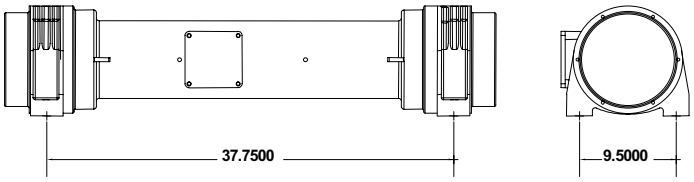

1500 RPM

MODEL: SG VIBRATOR - 50 HZ - (NON-EXPLOSION PROOF TERMINAL BLOCK STYLE)

Vibrator Model	**SG-215/220-50**	**SG-230/240-50**	**SG-380/400-50**	**SG-415-50**	**SG-440-50**	**SG-500-50**	**SG-525-50**	**SG-660-50**
Voltage [Volts]	215/220	230/240	380/400	415	440	500	525	660
Phase / Frequency [Hz]	3/50	3/50	3/50	3/50	3/50	3/50	3/50	3/50
Speed [RPM]	1500	1500	1500	1500	1500	1500	1500	1500
Rated Horsepower [HP]	2.5	2.5	2.5	2.5	2.5	2.5	2.5	2.5
Current @ Idle / Full Load [Amps]	3.6 / 7.1	3.3 / 6.5	2.1 / 4.0	1.9 / 3.8	1.8 / 3.6	1.6 / 3.1	1.5 / 3.0	1.4 / 2.85
Locked Rotor Current [Amps] / Locked Rotor Code	28.4 / D	26.0 / D	16.0 / D	15.2 / D	14.4 / D	12.5 / D	12.0 / D	11.4 / D
Fuse - Non Delay [Amps]	20	20	12	10	10	7.5	7.5	5
Overload protection [Amps]	8	7	5	4	4	3.5	3.5	3.5

Data below is common to all model **SG** 50 Hz vibrators.

Insulation class	F
Ambient temperature	55º C
Operating temperature code	T3C
Maximum temperature rise	46º C by Resistance
Duty	CONTINUOUS
Thermal switch rating	Pilot Duty 720VA, 110 – 600VAC
Thermal switch type	Normally Closed
Thermal switch temperature	Opens @ 145º C / Closes @ 140º C
Power factor - operations	99.13
Efficiency - running	98%
Service Factor	1.0
NEMA design	TENV
Ingress Protection	IP 56
Weight	290 lbs.-(132 kg) ALUMINUM
Hazardous location (listed as)	NOT LISTED FOR HAZARDOUS LOCATIONS
Listing agency	NONE

NOTE: Derrick® vibrators are fixed load devices with no means of altering the loading or power consumption. Power factor correction capacitors are not recommended for this motor.

DERRICK® CORP. - MOTOR DATA SHEET

DOC# PE-S-256-02

Wire Code

Power	Black, White & Red
Ground	Green
Thermal Switch	Orange & Blue

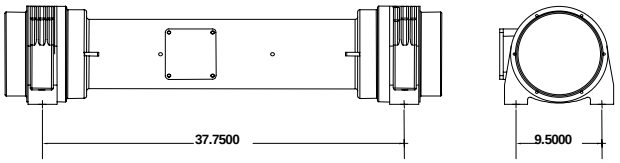

1800 RPM

MODEL**: SG VIBRATOR - 60 HZ - (NON-EXPLOSION PROOF TERMINAL BLOCK STYLE)**

Vibrator Model	SG-215/220-60	SG-230/240-60	SG-380/400-60	SG-440-60	SG-460/480-60	SG-575/600-60
Voltage [Volts]	215/220	230/240	380/400	440	460/480	575/600
Phase / Frequency [Hz]	3/60	3/60	3/60	3/60	3/60	3/60
Speed [RPM]	1800	1800	1800	1800	1800	1800
Rated Horsepower [HP]	2.5	2.5	2.5	2.5	2.5	2.5
Current @ Idle / Full Load [Amps]	4.4 / 8.7	4.1 / 8.2	2.5 / 4.9	2.1 / 4.3	2.0 / 4.1	1.6 / 3.3
Locked Rotor Current [Amps] / Locked Rotor Code	34.9 / F	32.6 / F	19.6 / F	17.0 / F	16.3 / F	13 / F
Fuse - Non Delay [Amps]	25	25	15	12	12	10
Overload protection [Amps]	10	10	6	5	5	4

Data below is common to all model **SG-60** vibrators.

Insulation class	F
Ambient temperature	55º C
Operating temperature code	T3C
Maximum temperature rise	46º C by Resistance
Duty	CONTINUOUS
Thermal switch rating	Pilot Duty 720VA, 110 - 600 VAC
Thermal switch type	Normally Closed
Thermal switch temperature	Opens @ 145º C / Closes @ 140º C
Power factor - operations	99.13
Efficiency - running	98%
Service Factor	1.0
NEMA design	TENV
Ingress Protection	IP 56
Weight	290 lbs.–(132 kg.) ALUMINUM
Hazardous location (listed as)	NOT LISTED FOR HAZARDOUS LOCATIONS
Listing agency	NONE

NOTE: Derrick® vibrators are fixed load devices with no means of altering the loading or power consumption. Power factor correction capacitors are not recommended for this motor.

02/11/05 – Rev. 2

SECTION 8 - REFERENCE DRAWINGS

This section contains Derrick engineering drawings for the Hi-G Dryer. These drawings are included to provide assistance in troubleshooting, repair, and parts ordering.

Drawing No.	Title	Equipment
13105-00-048 -	General Arrangement	3 Panel
14789-08 -	General Arrangement	4 Panel
14789-00-002 -	General Arrangement, Dual Hydrocyclone Cluster	4 Panel
5339-00-063 -	Parts List, Screen Frame	3 Panel
9780-00-072 -	Parts List, Screen Frame	4 Panel
15646-00-001 -	Parts List, Screen Frame Lifting Mechanism	3 & 4 Panel
13715-00-006 -	Parts List, 12-20 Way Desilter	3 & 4 Panel
13289-00-001 -	Parts list, Box Feeder	3 & 4 Panel
13939-00 -	4” Ceramic Lined Hydrocyclone	3 & 4 Panel
11234-00 -	4” Cone Assembly	3 & 4 Panel
12048-00 -	Screen Tensioning Assembly, Rapid Change	3 & 4 Panel
13320-00 -	Wiring Schematic	3 & 4 Panel
13244-00-014 -	Parts List, Single Desilter Collection Pan	3 & 4 Panel
14841-00-001 -	Parts List, Dual Desilter Collection Pan	3 & 4 Panel
PE-S-014-09 -	Thermal Unit Selection Table	3 & 4 Panel

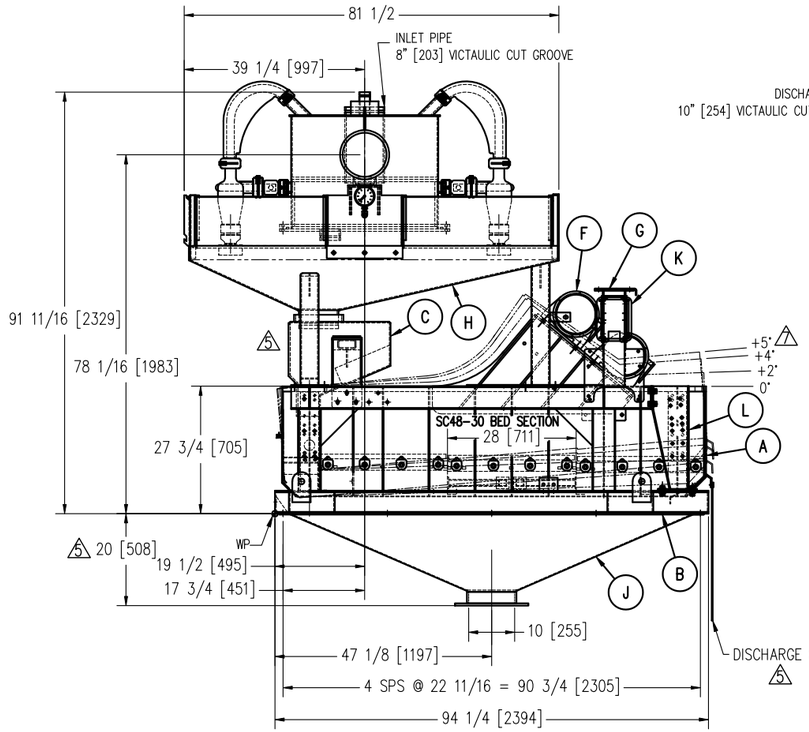

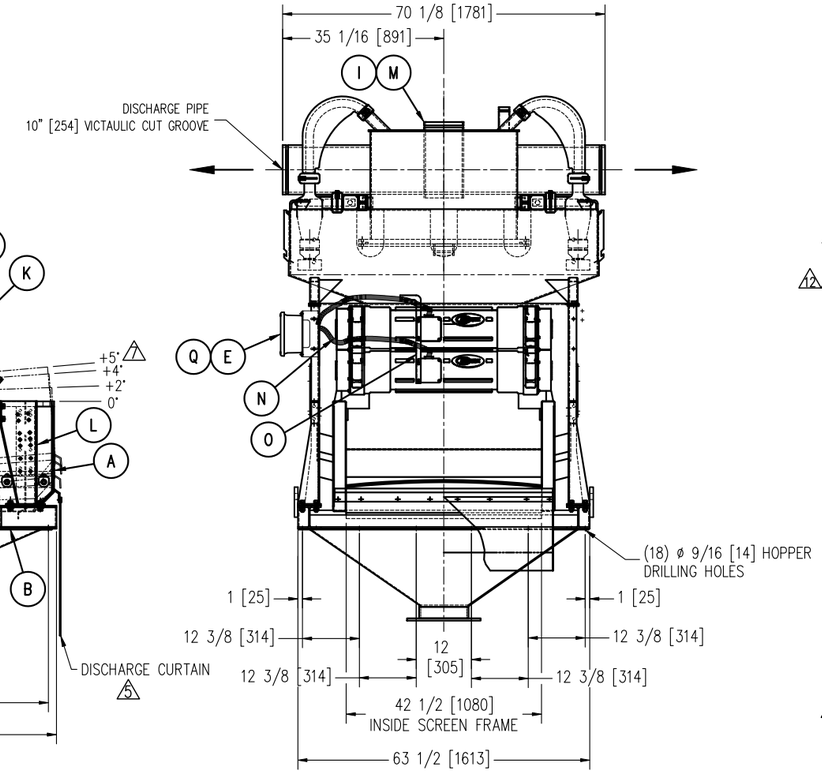

NOTES:

1) QUANTITY PER MODS/ MOIS SHEET 9
5 1 2) TWO (2) SG VIBRATING MOTORS PER UNIT; "SG" MOTORS PER MODS/ MOIS SHEET 9
2 11 10 3) COATING TYPE: ZRE/PSX (G0009628) (UON)
5 4) SCREEN FRAME:
A) 10GA HRS CONSTRUCTION
B) BED MATERIAL: BONDED 3/8 [10] RUBBER
C) DRAW BOLT TYPE: **12048-00**
1 2 D) DRAW BAR TYPE: **15761-Q-30-304**
E) STRINGER PROTECTOR TYPE: **8181-03-30-OM** 6
F) FEED PLATE LINER: BONDED 3/8 [10] RUBBER
G) FLOAT MOUNT TYPE: **1129-00**
H) WRENCH TYPE: PP1116
5) SUPPORT FRAME:
A) HRS CONSTRUCTION (W5 [127] X 16.0 [7])
6) BOX FEEDER:
A) 1/4 [6] HRS CONSTRUCTION
5 7) 20-WAY/16-WAY/12-WAY CYCLONE:
A) 1/4 [6] HRS/AR235 CONSTRUCTION 6
5 8) PAN:
A) 1/4 [6] HRS CONSTRUCTION
B) PAN INTERIOR COATING: PER MODS/ MOIS SHEET 6 9
9) FRONT SHIPPING BRACKET: **14029-03**
10) SKID UNIT FOR SHIPMENT
6 3 11) HOPPER OPTIONAL PER MODS/ MOIS SHEET 9
A) 7GA [5] HRS CONSTRUCTION

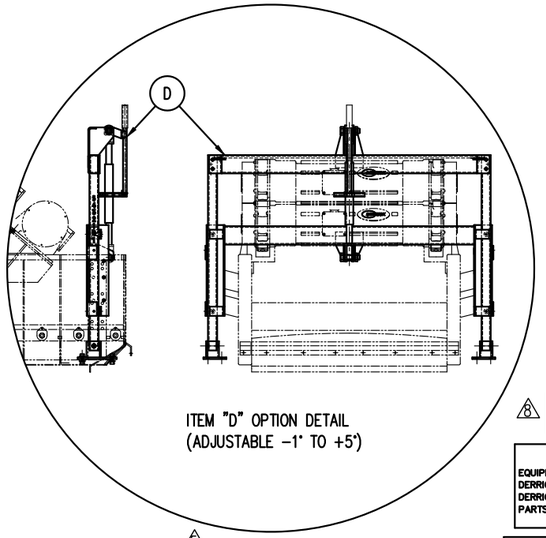

ITEM "D" OPTION DETAIL
(ADJUSTABLE -1° TO +5°)

5 ITEM "D" OPTION DETAIL

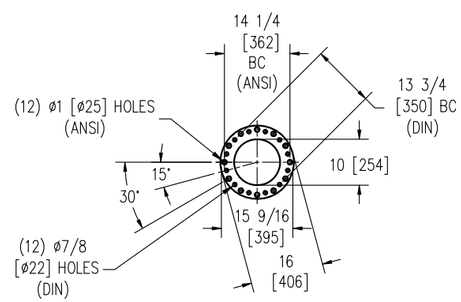

5 UNDERS/OVERS FLANGE
10" ANSI 150#/DIN 250-PN10 DRILLING
1/2" [13] HRS PLATE

8 MAXIMUM TRANSMITTED DYNAMIC LOAD
358 LBS [185]

TAG
EQUIPMENT NO.
DERRICK MODEL NO. 2SG48-90W-3A
DERRICK DRAWING NO. 13105-00-048
PARTS LIST NO. 5339-00-063

RECOMMENDED MAINTENANCE AND ACCESS SPACE-

FRONT- 2-3 FEET	[610-914]
SIDES- 2-3 FEET	[610-914]
REAR- 2-3 FEET	[610-914]

DIMENSIONS IN [] = MM,KG

OVERALL DIMENSIONS ± 1/4 [6]

APPROX WT SEE BILL OF MATERIALS

1 5 9 * ITEMS D & L ARE OPTIONAL ITEMS (REFERENCE MODS/ MOIS SHEET)
** USE ITEM L WHEN ITEM D IS NOT USED (REFERENCE MODS/ MOIS SHEET)
*** ITEMS H,I,M & P (REFERENCE MODS/ MOIS SHEET)
9 **** ITEM J (REFERENCE MODS/ MOIS SHEET)
12 ***** ITEM Q ,E (REFERENCE MODS/ MOIS SHEET)

	QTY	ITEM	PART NAME	DRAWING NUMBER	PARTS LIST	WGT
12 *****	1	Q	ELECTRICAL PARTS LIST	17248-01-003		20 [9]
6 ***	1	P	16-WAY CYCLONE	**15185-01**	**13715-19-006 (16-WAY)**	1900 [862]
7 6	2	O	ELECTRICAL CORD HANGER	**14091-07**		2 [1]
1 4 6	2	N	MOTOR CORD	**11879-00**		-
5 ***	1	M	20-WAY CYCLONE	**15185-01**	**13715-01-006 (20-WAY)**	1900 [862]
5 **	1	L	BOLT-ON FLOAT MOUNT UPRIGHT ASSEMBLY	**16559-01**		50 [23]
	1	K	JUNCTION BOX BRACKET	**13209-00**		
****	1	J	HOPPER	**12726-01-016**		450 [204]
5 ***	1	I	12-WAY CYCLONE	**15185-01**	**13715-18-006 (12-WAY)**	1750 [794]
4 9 ***	1	H	PAN	**9779-01-027**	**13244-00-014**	790 [358]
4	1	G	CROSSOVER ASSEMBLY	**13139-01-002**	-	30 [14]
	2	F	"SG" MOTORS	SEE NOTES	PER ORDER FORM	2SG=560 [254]
12 5 *****	1	E	JUNCTION BOX	14320-01		2 [1]
5 4 *	1	D	LIFTING MECHANISM (AWD)	**15646-01-001**	**15646-01-001**	350 [159]
	1	C	BOX FEEDER	**14401-01-001**	**13289-02-001**	170 [77]
	1	B	SUPPORT STRUCTURE	**13114-01-021**		650 [295]
	1	A	SCREEN FRAME	**5411-42-001**	**5339-00-063**	1070 [485]

REV	CHANGE	CKD	DATE
12	ADDED ITEM "Q" AND NOTE ***** ZRE/PSX WAS ZRE/UE	DJK BKS	5/3/11
11	ZRE/UE WAS ZRE/HSE	JHM EJR	5/19/08
10	NOTE 3 ZRE/HSE WAS ZRE/UE	BA EJR	1/9/08
9	ADDED MOIS SHEET TO ALL OPTION NOTES WITH * ; ADDED *** TO ITEM H; REMOVED ORDER FORM FROM NOTES AND OPTION NOTES.	BA EJR	09/10/07
8	ADDED MAXIMUM TRANSMITTED LOAD DIAGRAM	WDS BA	7/6/07
7	MACHINE ANGLE WAS ADJUSTABLE TO +6 DEG; ITEM O QTY WAS 1	BKS BA	3/8/07
6	NOTE 4 E WAS 8181-00-30-OM; NOTE 7 B, 4" URETHANE CONES WAS REMOVED; ADDED NOTE 8 B; NOTE 11 WAS IF SUPPLIED; ADDED METRIC	BKS EJR	1/19/07
5	REMOVE COATING FROM NOTES 4 AND 8 - WAS U100; ADDED DISCHARGE CURTAIN; REMOVED REAR PIPE TARGETS ON FEEDER; ITEM E WAS CRH-EAJ026; ALL CHANGES PER SALES.	BA TJS	11/01/06
4	L WAKE ITEM D & L OPTIONAL, ITEM D DRAWING NUMBER WAS 7276-00-017, PARTS LIST WAS 7606-00-028, ADJUSTMENT WAS FROM -1 DEGREE TO +5 DEGREES; PL 5339-00-063 WAS 5339-00-053. ITEM H WAS 9779-01-019, PL WAS 13244-01-006, 11879-00 WAS 11881-01, ITEM D WAS 7276-00-007, PL WAS 7606-00-017; ITEM G WAS 13139-00.	WS MC	11/3/04
3	ADDED "IF SUPPLIED" TO NOTE 11	EJR NVB	4/21/04
2	NOTE 40 WAS 15671-Q-30-304 (TYPO)	RM	4/7/04
1	NOTE 40 WAS 13465-Q-30-304; MOTOR WAS SG30-18-460/480-6; ADDED MOTOR CORD 11881-01; ADDED MODS TO NOTE.	BA NVB	02/28/04

THE DESIGNS AND INFORMATION CONTAINED ON THIS DRAWING OR COPIES REMAIN THE EXCLUSIVE PROPERTY OF DERRICK® CORPORATION BUFFALO, NEW YORK U.S.A. AND ARE NOT TO BE REPRODUCED WITHOUT THE WRITTEN PERMISSION OF DERRICK CORPORATION. THE INFORMATION CONTAINED ON THIS DRAWING SHALL ONLY BE USED BY CUSTOMERS OR PROSPECTS OR THEIR AGENCIES IN THE ARRANGEMENT OR INSTALLATION OF DERRICK EQUIPMENT, OR BY VENDORS IN QUOTING ON OR IN THE SUPPLY OF PARTS OR ASSEMBLIES TO DERRICK, OR BY OTHERS FOR THE SPECIFIC REASON OUTLINED IN THE TRANSMITTAL WHETHER WRITTEN OR VERBAL.

TITLE 2SG48-90W-3A
(3) PANEL ADJUSTABLE

DWN PR | CKD | DATE 3/24/99 | SCALE 1:20 | REV 12

SHEET SIZE C | F C Y | DWN EJR 8/1/03 | CKD SB 8/5/03

DRAWING NO. 13105-00-048

DERRICK® CORPORATION
590 DUKE ROAD BUFFALO, NY 14225 U.S.A.

NOTES:
1) ONE (1) UNIT COMPLETE
2) TWO (2) VIBRATING MOTORS PER UNIT, SG-38-18-460/480-6-001
   460/480/60/3, 2 1/2 HP, 1800 RPM
3) COATING TYPE: ZRE/UE (UON)
4) SCREEN FRAME:
   A) 10GA HRS CONSTRUCTION
   B) BED MATERIAL: BONDED 3/8 RUBBER
   C) DRAW BOLT TYPE: **12048-00**
   D) DRAW BAR TYPE: **15761-Q-30-304**
   E) STRINGER PROTECTOR TYPE: **8181-00-30-OM**
   F) FEED PLATE LINER: BONDED 3/8 RUBBER
   G) FLOAT MOUNT TYPE: **1129-00**
   H) WRENCH TYPE: PP1116
   I) COATING TYPE: U100 (30 MILS)
5) SUPPORT FRAME:
   A) HRS CONSTRUCTION (W5 X #16.0)
6) BOX FEEDER:
   A) 1/4 HRS CONSTRUCTION
7) (1) 20-WAY CYCLONE:
   A) 1/4 HRS / AR235 CONSTRUCTION
   B) TWENTY (20) 4" URETHANE CONES
      W/ CERAMIC LINED CONE TIPS EACH
8) PAN:
   A) 1/4 HRS CONSTRUCTION
   B) LINING TYPE: U100 (125 MILS)
9) FRONT SHIPPING BRACKET: **14029-03**
10) HOPPER: (NOT SHOWN)
   A) 7GA HRS CONSTRUCTION
   B) COATING TYPE: ZRE/UE
11) SKID UNIT FOR SHIPMENT

	QTY	ITEM	PART NAME	DRAWING NUMBER	PARTS LIST
*	1	I	HOPPER	12726-00-008	
	1	H	JUNCTION BOX MNT'G PLATE	**13209-00**	
	2	G	"SG" MOTORS	SEE NOTES	
	1	F	20-WAY CYCLONE	**15185-01**	**13715-01-006**
⚠1	1	E	AWD	**14499-01-002**	**9921-00-015**
	1	D	DESILTER PAN	**9779-01-027**	**13244-00-014**
	1	C	BOX FEEDER	**14401-01-001**	**13289-02-001**
	1	B	SCREEN FRAME	**9762-57-006**	**9780-00-059**
	1	A	SUPPORT STRUCTURE	**14497-00**	

* ITEM I IS AN OPTIONAL ITEM (REFERENCE MODS/SCREEN CLOTH SHEET FOR CUSTOMER REQUEST)

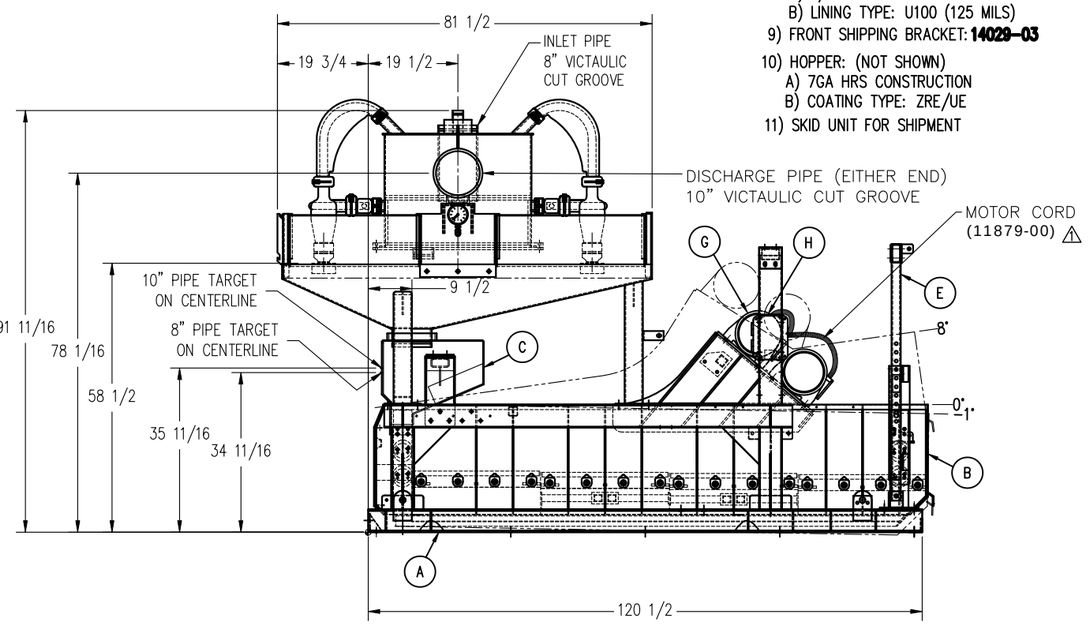

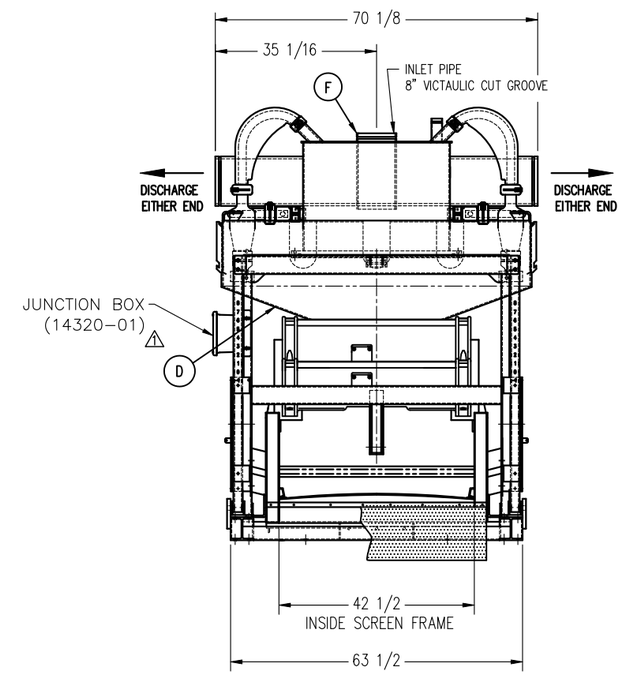

DERRICK MINING STOCK

OVERALL DIMENSIONS ± 1/4

TAG
DATE:
EQUIPMENT NO.
DERRICK MODEL NO. 2/48-120W-4A
DERRICK DRAWING NO. 14789-08
PARTS LIST NO. 9780-00-059
PURCHASE ORDER NO.

JOB ORDER NUMBER

APPROX. WEIGHT 6500 LBS

RECOMMENDED MAINTENANCE AND ACCESS SPACE–
FRONT– 2–3 FEET
SIDES– 2–3 FEET
REAR– 2–3 FEET

EB	DEPT.
4P	1abc, 2abce, 4a

REV	CHANGE	CKD	DATE
1	BOLDED FC DRAWINGS; ITEM W AS 14499-01 WITH P/L 9921-00-013; 11879-00 WAS 11879-01; ADDED JUNCTION BOX	BKS	10/28/04

THE DESIGNS AND INFORMATION CONTAINED ON THIS DRAWING OR COPIES REMAIN THE EXCLUSIVE PROPERTY OF DERRICK® CORPORATION BUFFALO, NEW YORK U.S.A. AND ARE NOT TO BE REPRODUCED WITHOUT THE WRITTEN PERMISSION OF DERRICK CORPORATION. THE INFORMATION CONTAINED ON THIS DRAWING SHALL ONLY BE USED BY CUSTOMERS OR PROSPECTS OR THEIR AGENCIES IN THE ARRANGEMENT OR INSTALLATION OF DERRICK EQUIPMENT, OR BY VENDORS IN QUOTING ON OR IN THE SUPPLY OF PARTS OR ASSEMBLIES TO DERRICK, OR BY OTHERS FOR THE SPECIFIC REASON OUTLINED IN THE TRANSMITTAL WHETHER WRITTEN OR VERBAL.

TITLE 2SG48-120W-4A
(4) PANEL ADJUSTABLE FROM -1° TO +8°

DWN CR | CKD | DATE 11/29/00 | SCALE 1:20 | REV 1
SHEET SIZE C | F C | DWN BA 05/13/04 | CKD TJS 05/14/04
DRAWING NO. 14789-08

DERRICK® CORPORATION
590 DUKE ROAD BUFFALO, NY 14225 U.S.A.

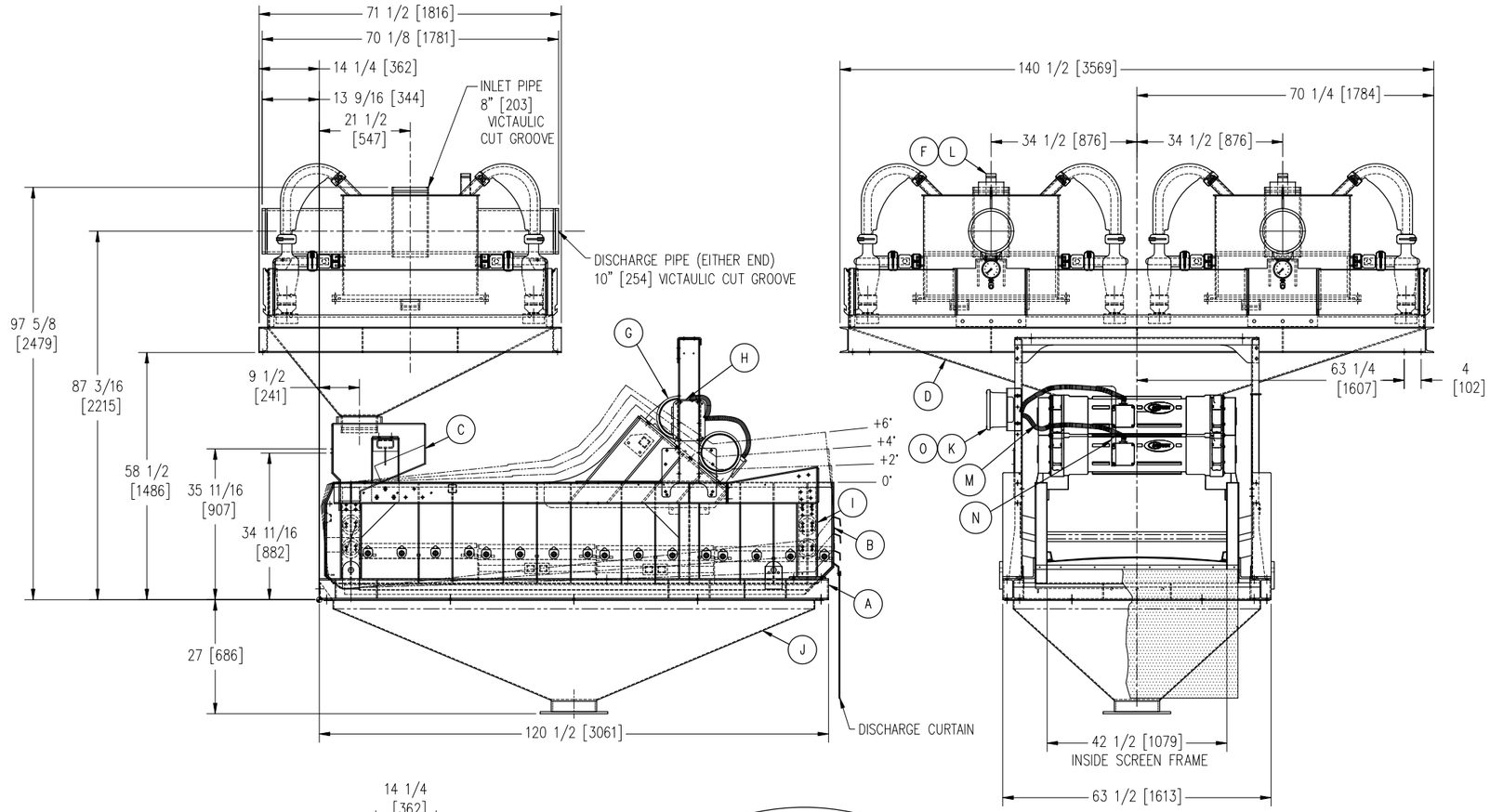

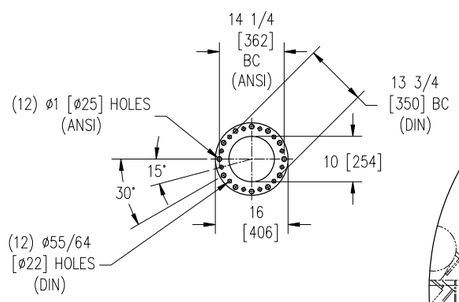

UNDERS/OVERS FLANGE
10" [254] ANSI 150#/DIN 250-PN10 DRILLING
1/2" [13] HRS PLATE

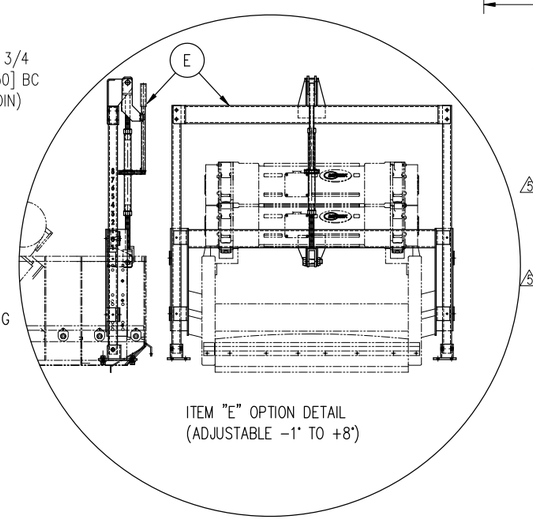

ITEM "E" OPTION DETAIL
(ADJUSTABLE -1° TO +8°)

NOTES:
1) QUANTITY PER MODS/ MOIS SHEET△2
2) TWO (2) VIBRATING MOTORS PER UNIT, "SG" MOTORS PER MODS/ MOIS SHEET△2
3) COATING TYPE: ZRE/PSX (UON)(G0009628)△3△4
4) SCREEN FRAME:
   A) 10 [3] GA HRS CONSTRUCTION
   B) BED MATERIAL: BONDED 3/8 [10] RUBBER
   C) DRAW BOLT TYPE: **12048-00**
   D) DRAW BAR TYPE: **15761-Q-30-304**
   E) STRINGER PROTECTOR TYPE: **8181-03-30-OM**
   F) FEED PLATE LINER: BONDED 3/8 [10] RUBBER
   G) FLOAT MOUNT TYPE: **1129-00**
   H) WRENCH TYPE: PP1116
   I) S/F COATING: PER MODS/ MOIS SHEET△2
5) SUPPORT FRAME:
   A) HRS CONSTRUCTION (W5 [127] X 16.0 [7])
6) BOX FEEDER:
   A) 1/4 [6] HRS CONSTRUCTION
7) (2) 20-WAY/16-WAY CYCLONE: PER MODS/ MOIS SHEET△2
   A) 1/4 [6] HRS / AR235 CONSTRUCTION
8) PAN:
   A) 1/4 [6] HRS CONSTRUCTION
   B) PAN INTERIOR COATING: PER MODS/ MOIS SHEET△2
9) FRONT SHIPPING BRACKET: **14029-03**
10) HOPPER: OPTIONAL PER MODS/ MOIS SHEET△2
   A) 7GA [5] HRS CONSTRUCTION
11) SKID UNIT FOR SHIPMENT

△5 ***** ITEM O, K (REFERENCE MODS/ MOIS SHEET)
△2 **** ITEM J (REFERENCE MODS/ MOIS SHEET)
*** ITEM D,F & L (REFERENCE MODS/ MOIS SHEET)
** USE ITEM I WHEN ITEM E IS NOT USED (REFERENCE MODS/ MOIS SHEET)
△2 * ITEM E IS AN OPTIONAL ITEM (REFERENCE MODS/ MOIS SHEET)

	QTY	ITEM	PART NAME	DRAWING/PART NUMBER	PARTS LIST	WEIGHT
△5*****	1	O	ELECTRICAL PARTS LIST (TANK SYSTEM)	17248-01-001		20 [9]
△1	2	N	ELECTRICAL CORD HANGER	**14091-07**		2 [1]
△1	2	M	MOTOR CORD	**11879-00**		
***	2	L	20-WAY CYCLONE	**15185-01**	**13715-01-006**	1510 [685] EACH
△5*****	1	K	JUNCTION BOX (STAND ALONE)	14320-01		5 [2]
****	1	J	HOPPER	**12726-01-017**		450 [204]
**	1	I	BOLT-ON FLOAT MOUNT UPRIGHT ASSEMBLY	**16559-02**		116 [53]
	1	H	JUNCTION BOX MNT'G PLATE	**13209-00**		7 [3]
	2	G	"SG" MOTORS	PER ORDER FORM		2SG=560 [254]
***	2	F	16-WAY CYCLONE	**15185-01**	**13715-19-006**	1510 [685] EACH
*	1	E	LIFTING MECHANISM (AWD)	**15976-01-002**	**16091-01-002**	300 [136]
△2***	1	D	DESILTER PAN	**14835-01-001**	**14841-01-001**	1520 [689]
	1	C	BOX FEEDER	**14401-01-001**	**13289-02-001**	170 [77]
	1	B	SCREEN FRAME	**9762-57-006**	**9780-00-072**	2050 [930]
	1	A	SUPPORT STRUCTURE	**14497-01-003**		750 [340]

DIMENSIONS IN [] = MM, KG

OVERALL DIMENSIONS ± 1/4 [6]

TAG
EQUIPMENT NO.
DERRICK MODEL NO. 2SG48-120W-4A
DERRICK DRAWING NO. **14789-00-002**
PARTS LIST NO. **9780-00-072**

RECOMMENDED MAINTENANCE AND ACCESS SPACE-
FRONT- 2-3 FEET [610-914]
SIDES- 2-3 FEET [610-914]
REAR- 2-3 FEET [610-914]

REV	CHANGE	CKD	DATE
5	ADDED ITEM O AND NOTE *****	BKS WS	4/25/11
4	IN NOTES PSX (G0009628) WAS UE (G0008638)	BKS BA	2/23/11
3	ADDED G0008638 TO NOTE 3	J-M BA	5/20/09
2	ADDED MOIS SHEET TO ALL OPTION NOTES WITH * ; ADDED *** TO NOTE D; REMOVED ORDER FORM FROM NOTES AND OPTION NOTES.	BA EJR	09/10/07
1	ADDED ITEMS M & N	BKS EJR	1/22/07

THE DESIGNS AND INFORMATION CONTAINED ON THIS DRAWING OR COPIES REMAIN THE EXCLUSIVE PROPERTY OF DERRICK® CORPORATION BUFFALO, NEW YORK U.S.A. AND ARE NOT TO BE REPRODUCED WITHOUT THE WRITTEN PERMISSION OF DERRICK CORPORATION. THE INFORMATION CONTAINED ON THIS DRAWING SHALL ONLY BE USED BY CUSTOMERS OR PROSPECTS OR THEIR AGENCIES IN THE ARRANGEMENT OR INSTALLATION OF DERRICK EQUIPMENT, OR BY VENDORS IN QUOTING ON OR IN THE SUPPLY OF PARTS OR ASSEMBLIES TO DERRICK, OR BY OTHERS FOR THE SPECIFIC REASON OUTLINED IN THE TRANSMITTAL WHETHER WRITTEN OR VERBAL.

TITLE 2SG48-120W-4A (4) PANEL ADJUSTABLE
DWN CR CKD DATE 11/29/00 SCALE 1:20 REV 5
SHEET SIZE C F C DWN was 10/09/06 CKD BA 10/11/06
DRAWING NO. 14789-00-002

DERRICK® CORPORATION
590 DUKE ROAD BUFFALO, NY 14225 U.S.A.

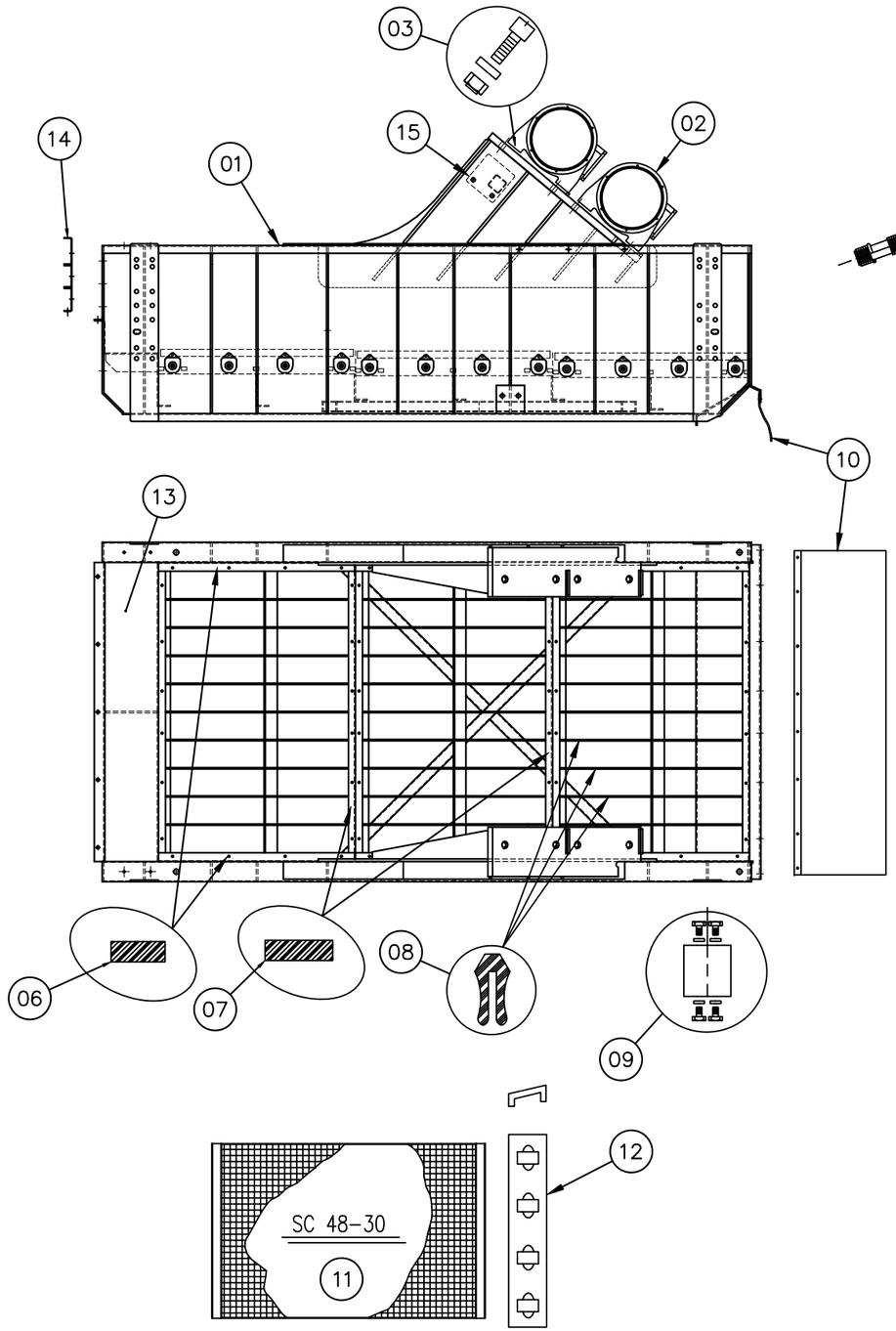

	QTY	ITEM	PART #	PART NAME	DESCRIPTION
	1	01	5411-42-001	SCREEN FRAME	2SG48-90W-3
	2	02	"SG" MOTORS	VIBRATING MOTOR	PER ORDER FORM/ MODS
	8	03	G0001973	MOTOR BOLT ASSY	L9 3/4-10
	24	04	12048-00	RAPID CHANGE ASSY	SEALING W/BRASS NUT
	1	05	PP1116	WRENCH	BOX END-RATCHET 3/4-7/8
	6	06	229-01-30-L	SIDE SUPPORT	3/8 X 1 1/4 X 28 RUBBER
	6	07	227-01-48-L	CROSS SUPPORT	3/8 X 1 X 40 RUBBER
	27	08	8181-03-30-OM	CHANNEL PROTECTOR	URETHANE X 26
	8	09	1129-00	FLOAT MOUNT	3 X 4 DIA W/BOLT ASSY
△1	1	10	G0007082 (11507-01)	FRONT CURTAIN	3/16 X 24 X 47 1/2 PVK-120
	3	11	SC48-30	SCREEN PANEL	TO SPECIFICATION
	6	12	15761-Q-30-304	Q.R. DRAW BAR	27 3/8 (304 SS)
	1	13	227-0725-48-L	FEED PLATE LINER	3/8 X 7 1/4 X 42 1/2 RUBBER
	1	14	13478-00	REAR CLOSE OFF	10GA HRS W/HARDWARE
	1	15	12052-00	SUPPORT/SPACER	ASSEMBLY
*	1	16	G0003904	VIBRATOR KIT W/O TOOLS	MOTOR BEARING
*	1	17	G0003905	VIBRATOR KIT W/ TOOLS	MOTOR BEARING
△1 **	5	18	SPR1/2HH-SS29SQ	SPRAY NOZZLE	SS
△2 **	5	19	11093-00	SPRAY NOZZLE	URETHANE

* FOR CUSTOMERS USE ONLY

△1 ** QUANTITY PER SPRAY BAR (IF APPLICABLE)

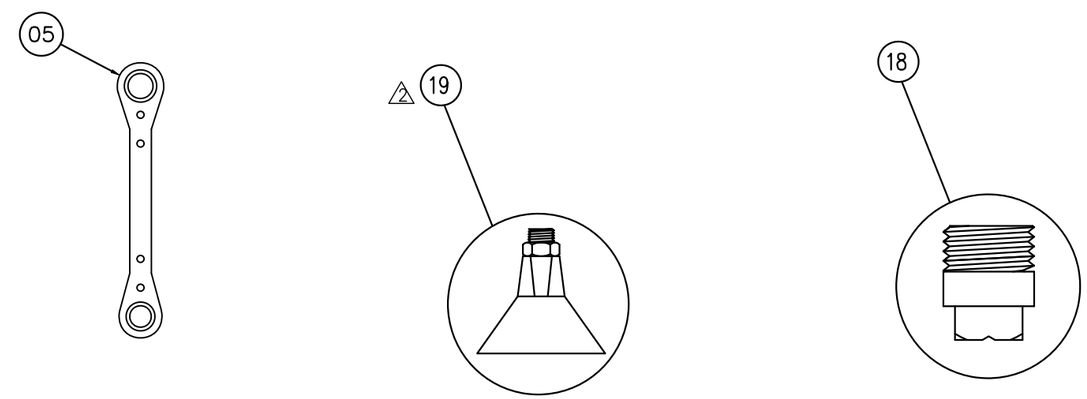

REV	CHANGE	CKD	DATE
2	ADDED ITEM 19	TJS BA	9/24/08
1	ADDED PART NUMBER FOR ITEM 10 CURTAIN, 11507-01 WAS 11507-02,ADDED ITEM 18 AND NOTE	EJR TJS	10/9/07

THE DESIGNS AND INFORMATION CONTAINED ON THIS DRAWING OR COPIES REMAIN THE EXCLUSIVE PROPERTY OF DERRICK® CORPORATION BUFFALO, NEW YORK U.S.A. AND ARE NOT TO BE REPRODUCED WITHOUT THE WRITTEN PERMISSION OF DERRICK CORPORATION. THE INFORMATION CONTAINED ON THIS DRAWING SHALL ONLY BE USED BY CUSTOMERS OR PROSPECTS OR THEIR AGENCIES IN THE ARRANGEMENT OR INSTALLATION OF DERRICK EQUIPMENT, OR BY VENDORS IN QUOTING ON OR IN THE SUPPLY OF PARTS OR ASSEMBLIES TO DERRICK, OR BY OTHERS FOR THE SPECIFIC REASON OUTLINED IN THE TRANSMITTAL WHETHER WRITTEN OR VERBAL.

TITLE PARTS LIST
SCREEN FRAME 2SG48-90W-3

DWN PR | CKD JW | DATE 02/19/91 | SCALE NONE | REV 2

SHEET SIZE B | F C Y | DWN BA 10/12/06 | CKD NVB 12/5/06

DRAWING NO. 5339-00-063

DERRICK® CORPORATION
590 DUKE ROAD BUFFALO, NY 14225 U.S.A.

LO,WE,SH,PC,UR

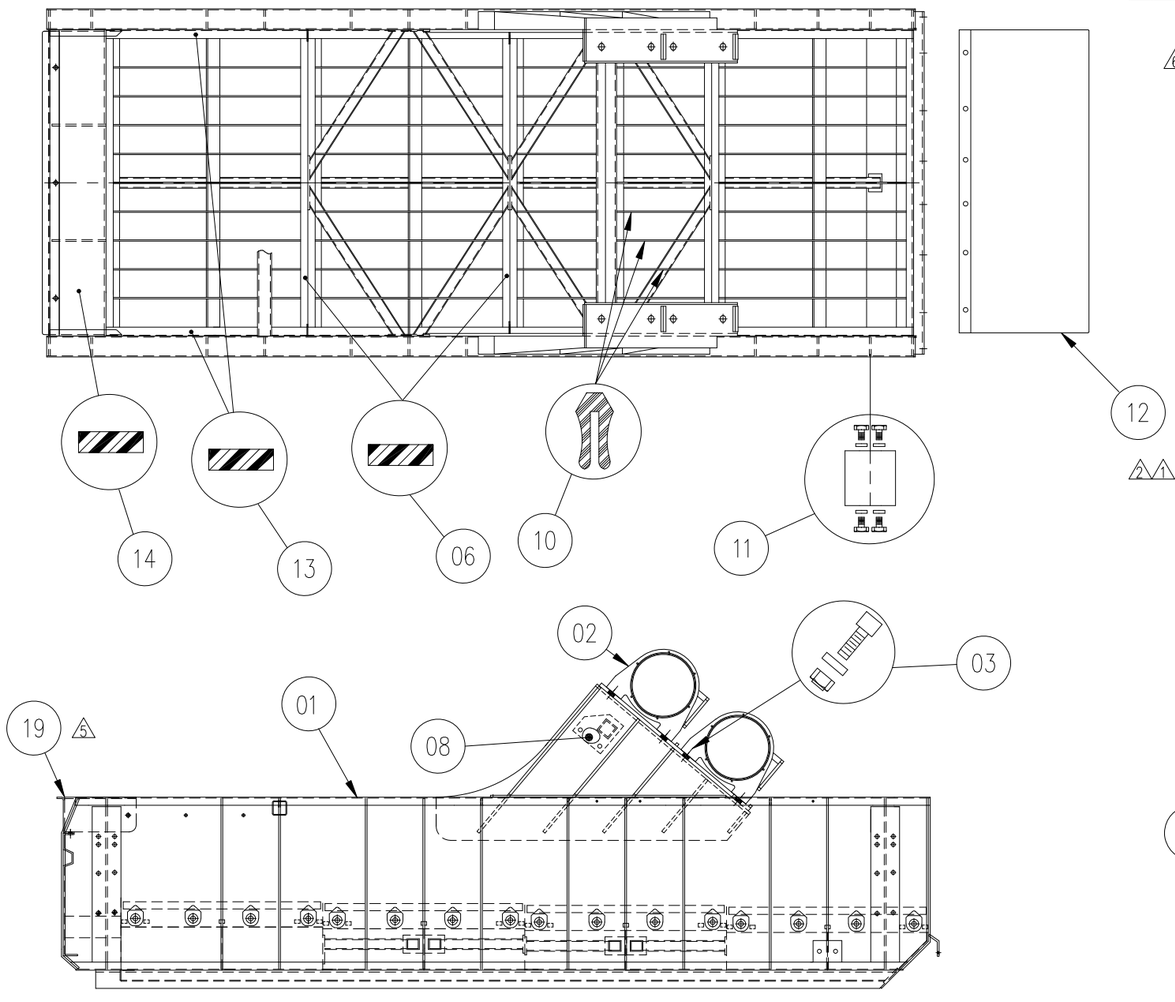

5	*	19	1	12928-01-001	SPLASH PLATE	7GA HRS
4	**	18	5	G0003439	SPRAY NOZZLE	1/4 NPT HYDR ATOMIZING SS
2 1	**	17	5	SPR1/2HH-SS29SQ	SPRAY NOZZLE	1/2 NPT FULL JET SS
	*	16	1	G0003905	VIBRATOR KIT W/ TOOLS	MOTOR BEARING
	*	15	1	G0003904	VIBRATOR KIT W/O TOOLS	MOTOR BEARING
6 1		14	1	227-750-48-L38	FEED PLATE LINER	3/8 X 7 1/2 X 42 1/2 RUBBER (TRIM TO FIT)
		13	8	229-01-30-L	SIDE SUPPORT	3/8 X 1 1/4 X 28 RUBBER
		12	1	G0007080	FRONT CURTAIN	3/16 X 47 1/2 X 30 PVK-120 (11507-00)
		11	8	1129-00	FLOAT MOUNT	4" DIA X 3" W/BOLT ASSY
		10	36	8181-03-30-OM	CHANNEL PROTECTOR	URETHANE
		09	8	15761-Q-30-304	Q-R DRAW BAR	27 3/8 (304 SS)
		08	1	12052-00	SUPPORT/SPACER	ASSEMBLY
		07	1	PP1116	WRENCH	BOX END RATCHET 3/4-7/8
		06	8	227-01-48-L	CROSS SUPPORT	3/8 X 1 X 40 RUBBER
		05	4	SC48-30	SCREEN PANEL	TO SPECIFICATION
		04	32	12048-00	RAPID CHANGE ASSY	1/2 SS BOLT W/ BRASS NUT
		03	8	G0001973	MOTOR BOLT ASSEMBLY	SPECIAL DERRICK
		02	2	PER SPECIFICATIONS	"SG" VIBRATING MOTOR	SEE ORDER FORM
1		01	1	9762-57-006	SCREEN FRAME	2SG48-120W-4 HRS
		ITEM	QTY	PART NO	PART NAME	DESCRIPTION

* FOR CUSTOMERS USE ONLY

2 1 ** PER SPRAY BAR (IF APPLICABLE)

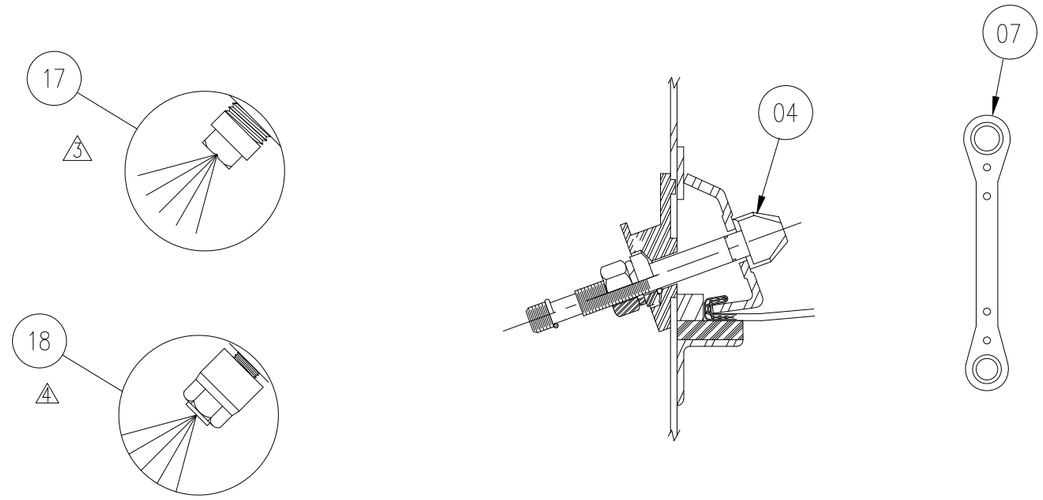

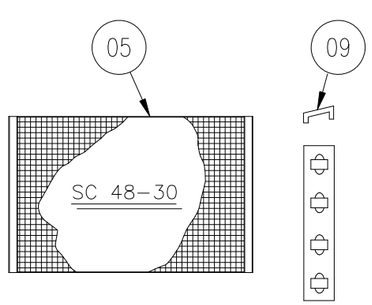

REV	CHANGE	CKD	DATE
5	ADDED ITEM 19 AND VIEW OF ITEM 19	EJR / SB	2/23/10
4	ADDED ITEM 18 AND VIEW OF ITEM 18	JHM / TJS	1/12/10
3	ADDED VIEW OF ITEM 17	JHM / BA	4/27/09
2	ADDED QUANTITY OF 5 TO ITEM 17,NOTE WAS - OPTIONAL PER ORDER FORM	TJS / BA	10/23/07
1	ADDED ITEM 17 AND NOTE,ITEM 01 AND TITLE BLOCK WERE 2SG48-120W-4A ITEM 14 WAS G0003272	TJS / BA	6/5/07
6	ADDED (TRIM TO FIT) TO ITEM 14	KAS / BA	5/14/12

THE DESIGNS AND INFORMATION CONTAINED ON THIS DRAWING OR COPIES REMAIN THE EXCLUSIVE PROPERTY OF DERRICK® CORPORATION BUFFALO, NEW YORK U.S.A. AND ARE NOT TO BE REPRODUCED WITHOUT THE WRITTEN PERMISSION OF DERRICK CORPORATION. THE INFORMATION CONTAINED ON THIS DRAWING SHALL ONLY BE USED BY CUSTOMERS OR PROSPECTS OR THEIR AGENCIES IN THE ARRANGEMENT OR INSTALLATION OF DERRICK EQUIPMENT, OR BY VENDORS IN QUOTING ON OR IN THE SUPPLY OF PARTS OR ASSEMBLIES TO DERRICK, OR BY OTHERS FOR THE SPECIFIC REASON OUTLINED IN THE TRANSMITTAL WHETHER WRITTEN OR VERBAL.

TITLE 1 PARTS LIST
2SG48-120W-4

DWN GAK CKD PR DATE 4/13/93 SCALE NONE REV 6

SHEET SIZE B Y F C

DWN BA 10/12/06
CKD NVB 12/5/06

DRAWING NO. 9780-00-072

DERRICK® CORPORATION
590 DUKE ROAD BUFFALO, NY 14225 U.S.A.

MAN

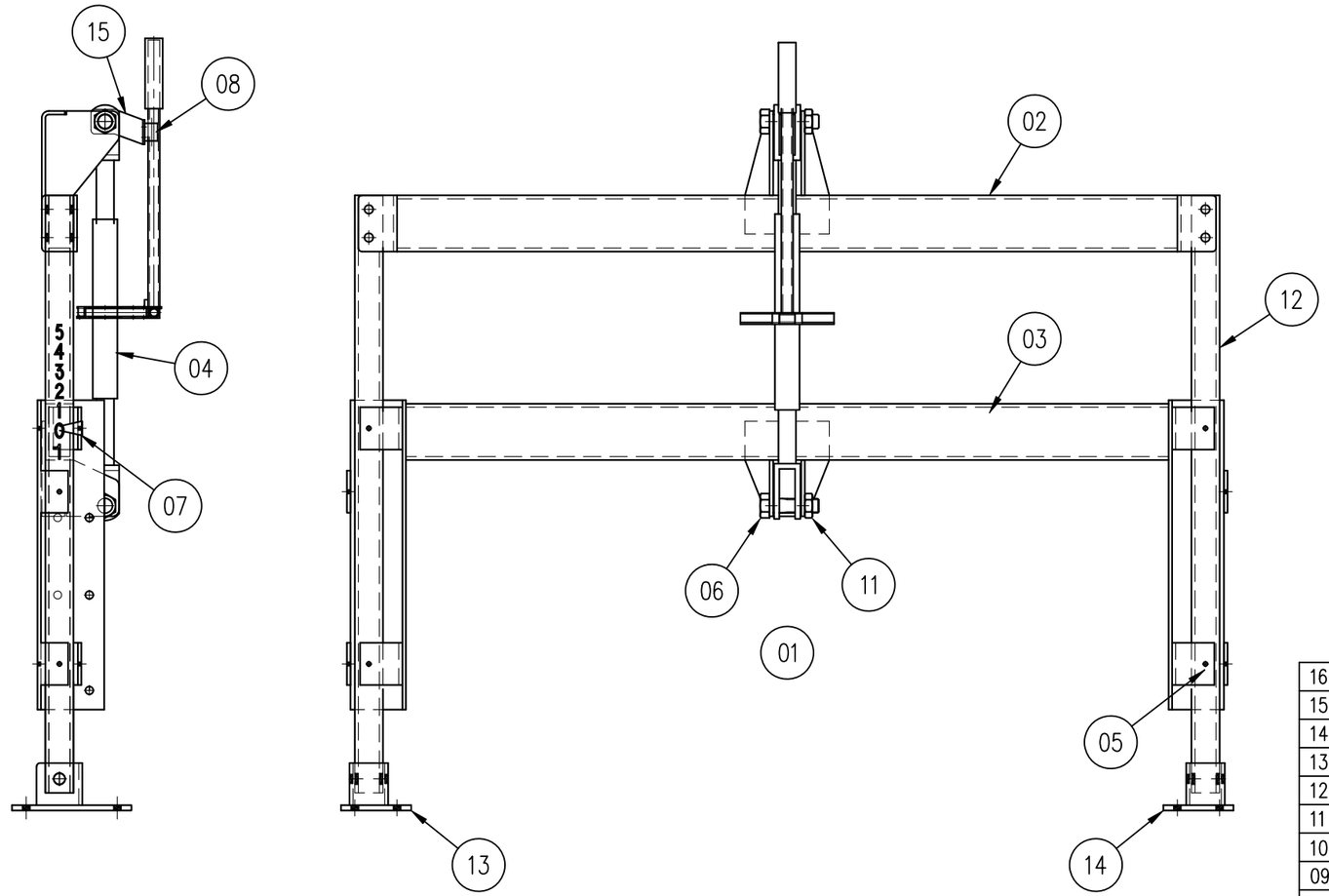

ITEM	QTY	DESCRIPTION/PART NUMBER	PART NAME
16			
15	1	16001-00	HANDLE CLIP MOUNTING ANGLE
14	1	15643-17-002	BASE BRACKET (LH)
13	1	15643-16-002	BASE BRACKET (RH)
12	2	13111-01-003	UPRIGHT SHAFT
11	2	G0004581	NUT (1" THIN NYLOC)
10			
09			
08	1	G0005177	HANDLE CLIP
07	2	15643-15-002	ANGLE INDICATOR ARROW
06	2	G0004582	BOLT (1"-8 X 3 1/2 SS)
05	12	OTCB-25X100X38	ELEVATOR BOLT
04	1	G0005849	MECHANICAL JACK
03	1	15643-03-002	LOWER CROSS ASSEMBLY
02	1	15643-02-002	UPPER CROSS ASSEMBLY
01	X	15646-01-001	ASSEMBLY COMPLETE

REF: **14495-00**

EB	DEPT
B	1bc, 2bc, 4a

REV	CHANGE	CKD	DATE
3	ITEM 04 WAS G0005164; ITEM 09 WAS 15941-01; ITEM 10 WAS G0003626; ITEM 16 WAS G0007201.	CCS	7/17/08
2	ADDED ITEM 16.	CCS	2/16/06
1	ITEM 07 WAS 15643-09-002; ADDED ITEM 15.	CCS	3/2/05

THE DESIGNS AND INFORMATION CONTAINED ON THIS DRAWING OR COPIES REMAIN THE EXCLUSIVE PROPERTY OF DERRICK® CORPORATION BUFFALO, NEW YORK U.S.A. AND ARE NOT TO BE REPRODUCED WITHOUT THE WRITTEN PERMISSION OF DERRICK CORPORATION. THE INFORMATION CONTAINED ON THIS DRAWING SHALL ONLY BE USED BY CUSTOMERS OR PROSPECTS OR THEIR AGENCIES IN THE ARRANGEMENT OR INSTALLATION OF DERRICK EQUIPMENT, OR BY VENDORS IN QUOTING ON OR IN THE SUPPLY OF PARTS OR ASSEMBLIES TO DERRICK, OR BY OTHERS FOR THE SPECIFIC REASON OUTLINED IN THE TRANSMITTAL WHETHER WRITTEN OR VERBAL.

TITLE: AWD PARTS LIST 2/48-90F-3TA

DWN CCS | CKD | DATE 8/6/03 | SCALE NTS | REV 3

SHEET SIZE B | F C | DWN CCS 7/26/04 | CKD

DRAWING NO. 15646-00-001

DERRICK® CORPORATION
590 DUKE ROAD BUFFALO, NY 14225 U.S.A.

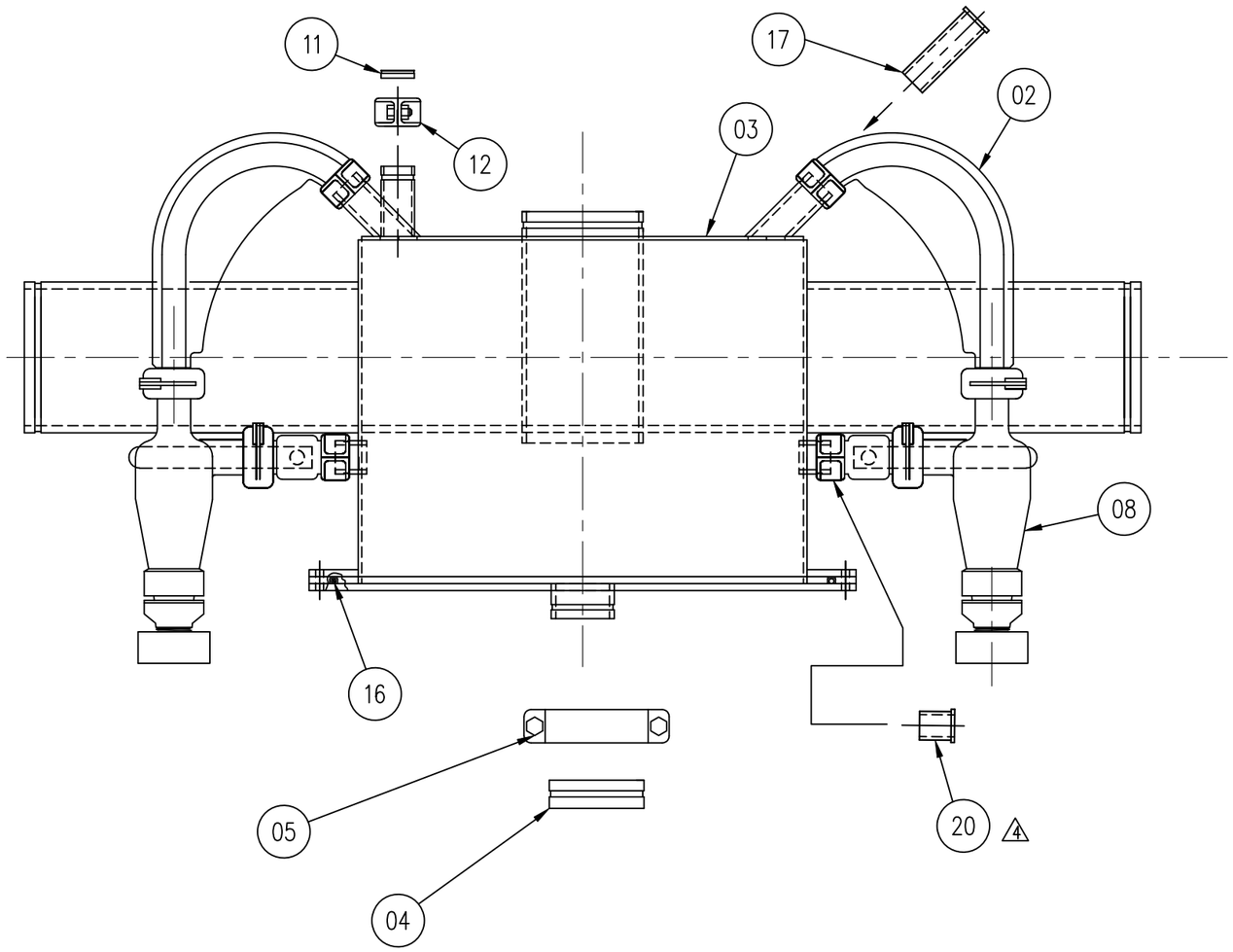

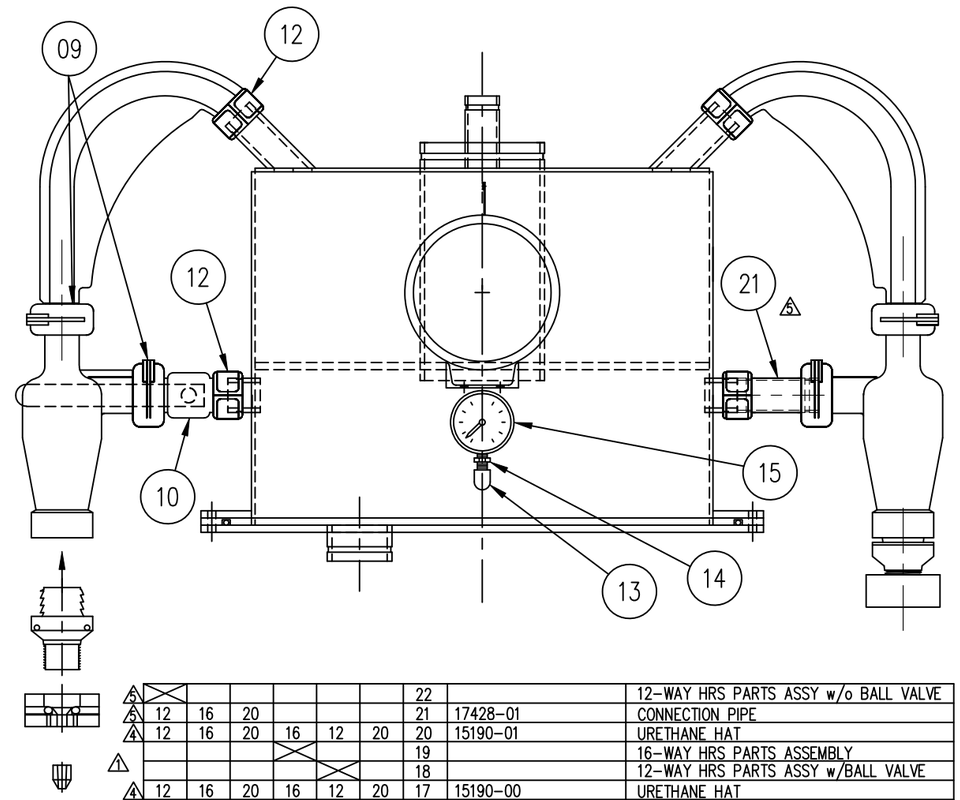

5						22		12-WAY HRS PARTS ASSY w/o BALL VALVE
5	12	16	20			21	17428-01	CONNECTION PIPE
4	12	16	20	16	12	20	20	15190-01	URETHANE HAT
						19		16-WAY HRS PARTS ASSEMBLY
1						18		12-WAY HRS PARTS ASSY w/BALL VALVE
4	12	16	20	16	12	20	17	15190-00	URETHANE HAT
	1	1	1	1	1	1	16	G0003903	O-RING
	1	1	1	1	1	1	15	PP1429	0-100 PSI GAUGE
	1	1	1	1	1	1	14	IMP-24SB-06X04	3/8"-1/4" REDUCER (STEEL)
	1	1	1	1	1	1	13	ESB-38	3/8"-90° BLACK STREET ELBOW
	41	41	41	41	41	41	12	VIC-2-07	2" VICTAULIC ZERO-FLEX COUPLING
	17	9	1	9	17	1	11	VIC-2-60	2" VICTAULIC CAP
				16	12	20	10	G0002077	2" VICTAULIC BALL VALVE
	24	32	40	32	24	40	09	VIC-2-78	2" VICTAULIC SNAP COUPLING
	12	16	20	16	12	20	08	10523-27	4" URETHANE CONE
5 2							07		16-WAY HRS PARTS ASSY w/o BALL VALVE
5 2							06		20-WAY HRS PARTS ASSY w/o BALL VALVE
3	1	1	1	1	1	1	05	VIC-4-75	4" VICTAULIC COUPLING
3	1	1	1	1	1	1	04	VIC-4-60	4" VICTAULIC CAP
	1	1	1	1	1	1	03	15185-01	20-WAY DESILTER HRS
	12	16	20	16	12	20	02	14807-01	135° ELBOW
							01		20-WAY HRS PARTS ASSY w/BALL VALVE
REQ'D						ITEM	PART NUMBER	DESCRIPTION /PART NAME

EB	DEPT.
4P	1bc, 2bc, 4a

REV	CHANGE	CKD	DATE
3	DESCRIPTION OF ITEMS 04 & 05 WAS 6"	SB MC	12/15/04
2	REMOVED ITEM 06 – QTY 1 VIC-10-60 (10" VIC CAP) AND ITEM 07 – QTY 1 VIC-10-77 (10" VIC COUPLING). FOR MINING APPLICATION ONLY	BA TJS	5/12/04
1	ADDED ASSEMBLY 18 & 19	SB NVB	8/14/03
5	ADDED ITEM 21, ASSY 06, 07 & 22 FOR OPTION w/o CONE SHUT-OFF VALVE	WS BA	4/22/11
4	ADDED ITEM 20; ITEM 17 – REDUCED REQ'D AMOUNT WAS 40,24,32 NOW 20, 12, 16	TRD SB	9/30/08

THE DESIGNS AND INFORMATION CONTAINED ON THIS DRAWING OR COPIES REMAIN THE EXCLUSIVE PROPERTY OF DERRICK® CORPORATION BUFFALO, NEW YORK U.S.A. AND ARE NOT TO BE REPRODUCED WITHOUT THE WRITTEN PERMISSION OF DERRICK CORPORATION. THE INFORMATION CONTAINED ON THIS DRAWING SHALL ONLY BE USED BY CUSTOMERS OR PROSPECTS OR THEIR AGENCIES IN THE ARRANGEMENT OR INSTALLATION OF DERRICK EQUIPMENT, OR BY VENDORS IN QUOTING ON OR IN THE SUPPLY OF PARTS OR ASSEMBLIES TO DERRICK, OR BY OTHERS FOR THE SPECIFIC REASON OUTLINED IN THE TRANSMITTAL WHETHER WRITTEN OR VERBAL.

TITLE: PARTS LIST FOR 12 – 20 WAY DESILTER WITH VERTICAL HYDROCYCLONES

DWN NVB | CKD PR | DATE 9/30/97 | SCALE 1=10 | REV 5

SHEET SIZE B | F C Y | DWN RES 5/1/02 | CKD WAS 5/3/02

DRAWING NO. 13715-00-006

DERRICK® CORPORATION
590 DUKE ROAD BUFFALO, NY 14225 U.S.A.

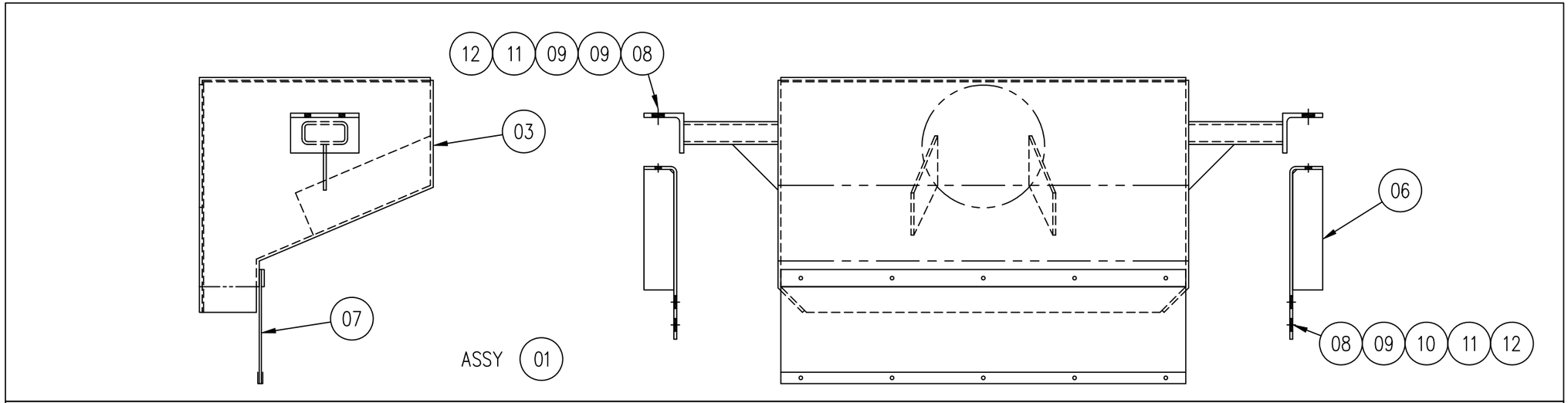

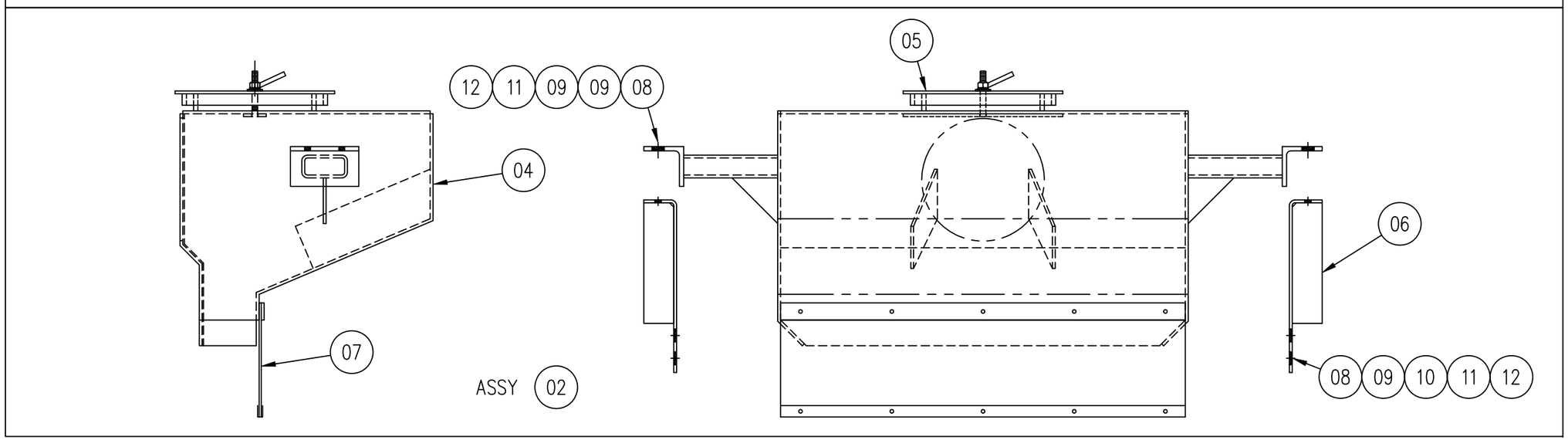

QTY		ITEM	PART NAME	DESCRIPTION / PART #
10	10	12	NUT	NHHS-50-13
10	10	11	LOCK WASHER	WLSS-50
6	6	10	FLAT WASHER - SAE	WFSS-50-SAE
14	14	09	FLAT WASHER	**12013-03**
10	10	08	BOLT	HXCS-50-13X175
1	1	07	CURTAIN	**14405-01-001**
2	2	06	SUPPORT BRACKET	**13782-17**
1		05	TOP PORT COVER	**14502-01**
1		04	BOX FEEDER	**14401-01-001**
	1	03	BOX FEEDER	**14401-01-002**
X		02	FEEDER ASSY COMPLETE	BOX STYLE W/COLLECTION PAN INLET
	X	01	FEEDER ASSY COMPLETE	STANDARD BOX STYLE

EB	DEPT.
AB	1abc, 2bcde, 4a

REF 14495-00
REF 14496-00

REV	CHANGE	CKD	DATE

THE DESIGNS AND INFORMATION CONTAINED ON THIS DRAWING OR COPIES REMAIN THE EXCLUSIVE PROPERTY OF DERRICK® CORPORATION BUFFALO, NEW YORK U.S.A. AND ARE NOT TO BE REPRODUCED WITHOUT THE WRITTEN PERMISSION OF DERRICK CORPORATION. THE INFORMATION CONTAINED ON THIS DRAWING SHALL ONLY BE USED BY CUSTOMERS OR PROSPECTS OR THEIR AGENCIES IN THE ARRANGEMENT OR INSTALLATION OF DERRICK EQUIPMENT, OR BY VENDORS IN QUOTING ON OR IN THE SUPPLY OF PARTS OR ASSEMBLIES TO DERRICK, OR NY OTHERS FOR THE SPECIFIC REASON OUTLINED IN THE TRANSMITTAL WHETHER WRITTEN **OR VERBAL.**

TITLE
PARTS LIST FOR
BOX FEEDER

DWN SB | CKD PR | DATE 1/27/97 | SCALE 1:10 | REV

SHEET SIZE B | F C Y | DWN WS 5/18/00 | CKD

DRAWING NO. 13289-00-001

DERRICK® CORPORATION
590 DUKE ROAD BUFFALO, NY 14225 U.S.A.

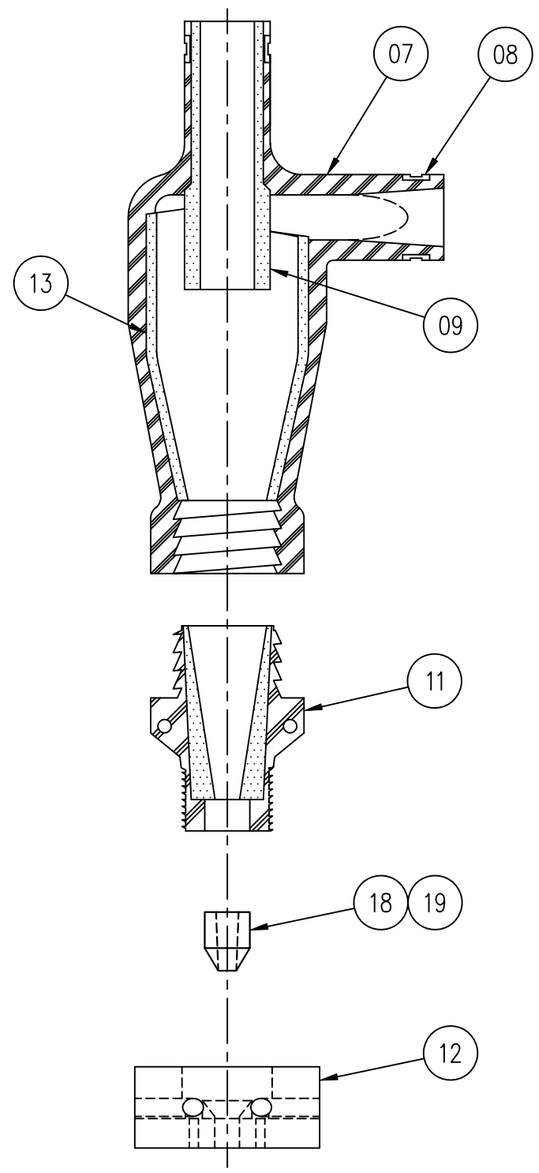

* – DETERMINED PER MODS AND OR MOIS SHEET

*△2	1	1				1					19	DROP IN APEX (.500 ORIFICE ADJ TO .375)	10523–03
*△2	1	1				1					18	DROP IN APEX (.625 ORIFICE ADJ TO .500)	10523–02
	X										17	CONE ASSY W/ CERAMIC VORTEX & FULL CONE	
		X									16	CONE ASSY W/ CERAMIC FULL CONE	
			X								15	BODY ASSY W/ CERAMIC VORTEX & FULL CONE	
				X							14	BODY ASSY W/ CERAMIC FULL CONE	
	1	1	1	1							13	CERAMIC FULL CONE	G0004419
	1	1				1					12	TRI–NUT	10523–04
	1	1				1					11	THREAD ON CONE TIP – CERAMIC LINED	13868–00
△2											10		
	1		1			1			1		09	VORTEX FINDER	13941–00
	2	2	2	2		2			2		08	RING	13676–00
	1	1	1	1		1			1		07	BODY	B836 URETHANE
△2											06		
									X		05	BODY ASSY w/ CERAMIC VORTEX	
△2											04		
△2											03		
						X					02	CONE ASSY w/ CERAMIC VORTEX	
△2											01		
	QUANTITY										ITEM	PART NAME	DESCRIPTION/PART NO

REV	CHANGE	CKD	DATE
2	DELETED ASSEMBLIES 01, 03, 04, 06 & ITEM 10, ADDED ITEMS 18 & 19	JHM TJS	6/16/08
1	ADDED ITEM 13 AND ASSEMBLIES 14 THRU 17 AND VIEW OF FULL CONE	EJR	6/02/03

THE DESIGNS AND INFORMATION CONTAINED ON THIS DRAWING OR COPIES REMAIN THE EXCLUSIVE PROPERTY OF DERRICK® CORPORATION BUFFALO, NEW YORK U.S.A. AND ARE NOT TO BE REPRODUCED WITHOUT THE WRITTEN PERMISSION OF DERRICK CORPORATION. THE INFORMATION CONTAINED ON THIS DRAWING SHALL ONLY BE USED BY CUSTOMERS OR PROSPECTS OR THEIR AGENCIES IN THE ARRANGEMENT OR INSTALLATION OF DERRICK EQUIPMENT, OR BY VENDORS IN QUOTING ON OR IN THE SUPPLY OF PARTS OR ASSEMBLIES TO DERRICK, OR BY OTHERS FOR THE SPECIFIC REASON OUTLINED IN THE TRANSMITTAL WHETHER WRITTEN OR VERBAL.

TITLE 4" CERAMIC LINED HYDROCYCLONE

DWN MP | CKD | DATE 5/6/98 | SCALE 1=4 | REV △2

SHEET SIZE B | N | F C | DWN | CKD

DRAWING NO. 13939–00

DERRICK® CORPORATION
590 DUKE ROAD BUFFALO, NY 14225 U.S.A.

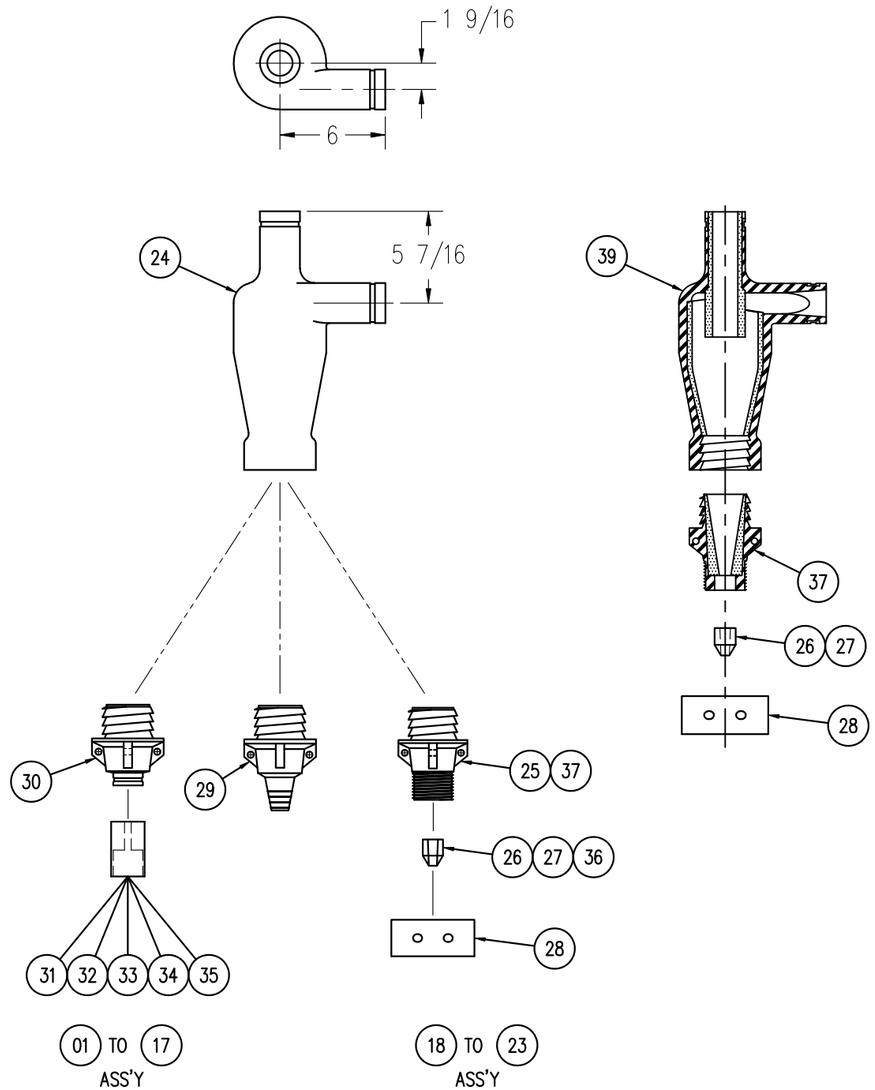

* – DETERMINED PER MODS AND / OR MOIS SHEET

	1	1	1	1	1	1																39	4" HYDROCYCONE BODY CERAMIC LINED (B836 URETHANE)	13939-07
							1	1					1									38	4" HYDROCYCONE BODY (RAMPLESS)	10523-23
	1		1		1					1	1	1	1									37	THREAD ON CONE TIP CERAMIC LINED	13868-00
*							1		1					1								36	DROP IN APEX (.375)	10523-21
															1							35	SNAP ON APEX (.240 ORIFICE)	10523-10
																1						34	SNAP ON APEX (.300 ORIFICE)	10523-09
																	1					33	SNAP ON APEX (.400 ORIFICE)	10523-08
																		1				32	SNAP ON APEX (.500 ORIFICE)	10523-07
																			1			31	SNAP ON APEX (.600 ORIFICE)	10523-06
														1	1	1	1	1				30	SNAP ON CONE TIP	10523-05
									1										1			29	CUT OFF CONE TIP	10523-11
	1		1		1		1	1	1		1	1	1	1	1						1	1	28	TRIANGULAR NUT	10523-04
*	1		1		1		1				1										1		27	DROP IN APEX (.500 ORIFICE ADJ TO .375)	10523-03
*	1		1		1							1		1								1	26	DROP IN APEX (.625 ORIFICE ADJ TO .500)	10523-02
							1	1	1					1	1						1	1	25	THREAD ON CONE TIP	10523-01
									1	1	1	1	1		1	1	1	1	1	1	1	1	24	4" HYDROCYCONE BODY (B836 URETHANE)	10523-00
	X																						23	CONE ASSY W/ CERAMIC VORTEX & FULL CONE	13939-17
		X																					22	BODY ASSY W/ CERAMIC VORTEX & FULL CONE	13939-15
			X																				21	CONE ASSY W/ CERAMIC FULL CONE	13939-16
				X																			20	BODY ASSY W/ CERAMIC FULL CONE	13939-14
					X																		19	CONE ASSY W/ CERAMIC VORTEX	13939-02
						X																	18	BODY ASSY W/ CERAMIC VORTEX	13939-05
							X																17	4" CONE ASSEMBLY	10523-33
								X															16	4" CONE ASSEMBLY	10523-32
									X														15	4" CONE ASSEMBLY	10523-29
										X													14	4" CONE ASSEMBLY	10523-28
											X												13	4" CONE ASSEMBLY	10523-27
												X											12	4" CONE ASSEMBLY	10523-26
													X										11	4" CONE ASSEMBLY	10523-25
														X									10	4" CONE ASSEMBLY	10523-22
															X								09	4" CONE ASSEMBLY	10523-20
																X							08	4" CONE ASSEMBLY	10523-19
																	X						07	4" CONE ASSEMBLY	10523-18
																		X					06	4" CONE ASSEMBLY	10523-17
																			X				05	4" CONE ASSEMBLY	10523-16
																				X			04	4" CONE ASSEMBLY	10523-15
																					X		03	4" CONE ASSEMBLY	10523-14
																						X	02	4" CONE ASSEMBLY	10523-13
																							01	4" CONE ASSEMBLY (STANDARD)	10523-12
QUANTITY																							ITEM	PART NAME/ DESCRIPITION	PART NO

REV	CHANGE	CKD	DATE
6	UPDATED TO CURRENT STANDARDS, ADDED CERAMIC CONES, PUT ON NEW FORMAT	JHM TJS	6/19/08

THE DESIGNS AND INFORMATION CONTAINED ON THIS DRAWING OR COPIES REMAIN THE EXCLUSIVE PROPERTY OF DERRICK® CORPORATION BUFFALO, NEW YORK U.S.A. AND ARE NOT TO BE REPRODUCED WITHOUT THE WRITTEN PERMISSION OF DERRICK CORPORATION. THE INFORMATION CONTAINED ON THIS DRAWING SHALL ONLY BE USED BY CUSTOMERS OR PROSPECTS OR THEIR AGENCIES IN THE ARRANGEMENT OR INSTALLATION OF DERRICK EQUIPMENT, OR BY VENDORS IN QUOTING ON OR IN THE SUPPLY OF PARTS OR ASSEMBLIES TO DERRICK, OR BY OTHERS FOR THE SPECIFIC REASON OUTLINED IN THE TRANSMITTAL WHETHER WRITTEN OR VERBAL.

TITLE PARTS LIST FOR DERRICK 4" CONE ASS'Y. AND 4" CERAMIC LINED HYDROCYCLONE ASSY.

DWN JHM | CKD TJS | DATE 6/19/08 | SCALE NONE | REV 6

SHEET SIZE B | F C N | DWN | CKD

DRAWING NO. 11234-00

DERRICK® CORPORATION
590 DUKE ROAD BUFFALO, NY 14225 U.S.A.

MAN

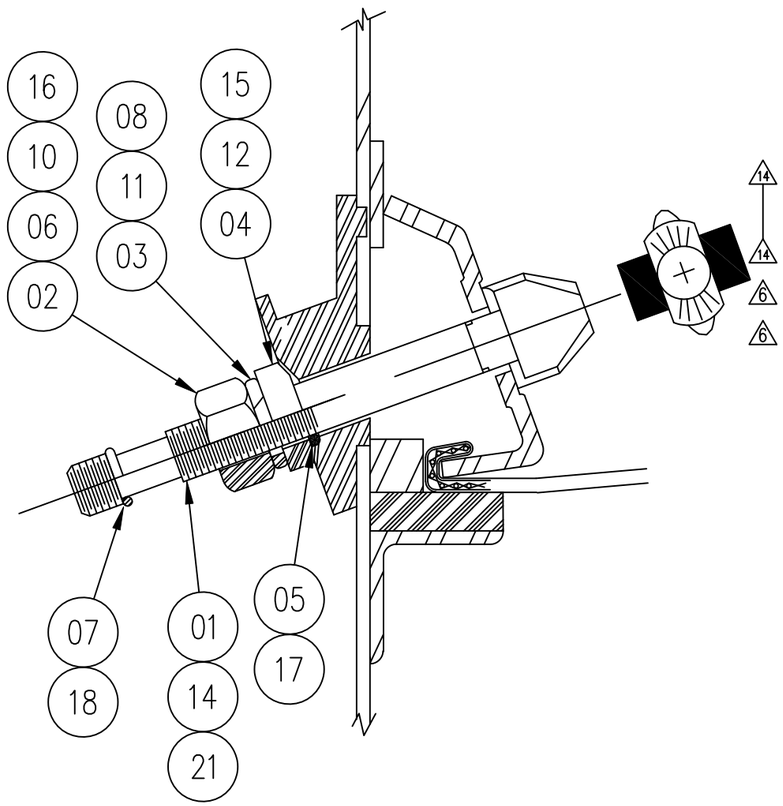

	ITEM	QTY						PART NAME	DESCRIPTION/PART NUMBER
	21	1						SEALING RAPID CHANGE BOLT	**12015–02–001**
15	20	X						ASSEMBLY COMPLETE	W/ 316 SS
	19		X					ASSEMBLY COMPLETE	w/ STAINLESS NUT
	18		1					'O' RING	G0004182
	17		1					'O' RING	G0004181
	16	1		1				NUT	NHHS–50–13–316
	15	1		1				EXTENDED WASHER	**12049–03**
6	14			1				SEALING RAPID CHANGE BOLT	**12015–02–002**
12 6	13			X				ASSEMBLY COMPLETE	W/ 316 SS
	12				1			EXTENDED WASHER	**12049–02**
	11				1			LOCK WASHER	WLPL–50
	10				1			NUT	NHHP–50–13
5	09				X			ASSEMBLY COMPLETE	W/ZPL NUT
11	08	1		1				LOCK WASHER	WLSS–50–316
4 3	07	1		1	1	1	1	'O' RING	ORBN–2110N67470
	06		1			1		NUT	NHHS–50–13
9 4 3 2	05	1		1	1	1	1	'O' RING	PP1490
10 9	04		1			1	1	EXTENDED WASHER	**12049–00**
	03		1			1	1	LOCK WASHER	WLSS–50
	02						1	NUT	NHHB–50–13
13 12 11 5	01		1		1	1	1	SEALING RAPID CHANGE BOLT	**12015–01–001**
	00–S					X		ASSEMBLY COMPLETE	w/ STAINLESS NUT
	00						X	ASSEMBLY COMPLETE	w/ BRASS NUT

EB	DEPT.
AB	1b, 2a, 4a

REV	CHANGE	CKD	DATE
13	CHANGED DRAWING NUMBER FROM 12015–01–002 TO 12015–01–001	TMR	4/23/02
12	CHANGED DRAWING NUMBER FROM 12015–01–001, TO 12015–01–002	TMR RM	4/09/02
11	ITEM 08 WAS 12015–03–001, ADDED ITEM 01 TO ASSY 09 SEE RECORD COPY OR OLDREV LAYER FOR REVISIONS 1–10	RGD WS	11/22/00

TITLE SEALING RAPID CHANGE BOLT ASSY 1

DWN SB | CKD | DATE 02/22/95 | SCALE 1:2 | REV 13

A SHEET SIZE | Y F C | DWN | CKD

DRAWING NO. 12048–00

THE DESIGNS AND INFORMATION CONTAINED ON THIS DRAWING OR COPIES REMAIN THE EXCLUSIVE PROPERTY OF DERRICK® CORPORATION BUFFALO, NEW YORK U.S.A. AND ARE NOT TO BE REPRODUCED WITHOUT THE WRITTEN PERMISSION OF DERRICK CORPORATION. THE INFORMATION CONTAINED ON THIS DRAWING SHALL ONLY BE USED BY CUSTOMERS OR PROSPECTS OR THEIR AGENCIES IN THE ARRANGEMENT OR INSTALLATION OF DERRICK EQUIPMENT, OR BY VENDORS IN QUOTING ON OR IN THE SUPPLY OF PARTS OR ASSEMBLIES TO DERRICK, OR NY OTHERS FOR THE SPECIFIC REASON OUTLINED IN THE TRANSMITTAL WHETHER WRITTEN OR VERBAL.

DERRICK® CORPORATION
590 DUKE ROAD BUFFALO, NY 14225 U.S.A.

TK, LO, WE, SH, PC

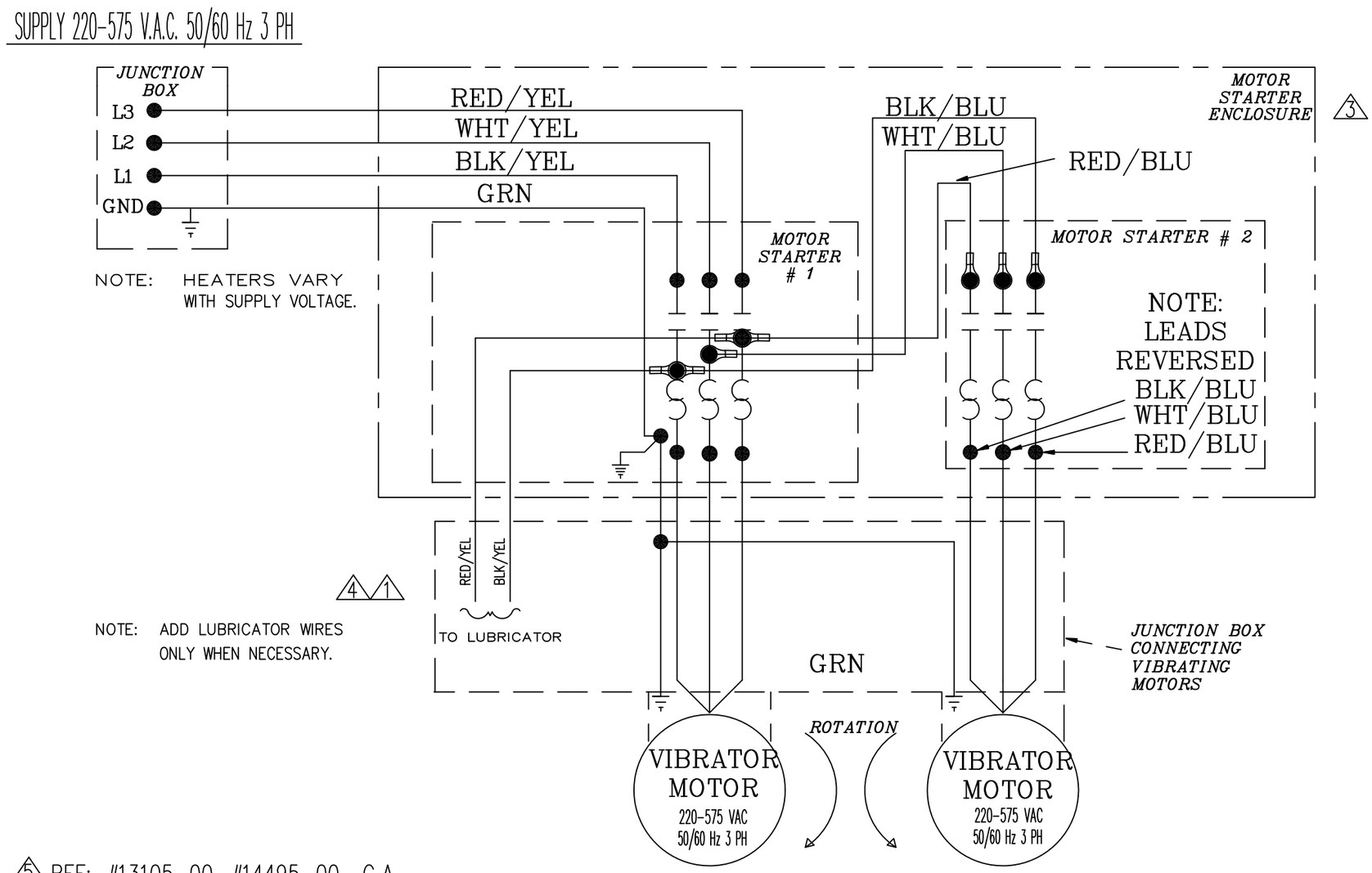

5 REF: #13105-00, #14495-00 G.A.
#14579-00, #14580-00 G.A.
#13203-00 ELECTRICAL PARTS LIST

REV	CHANGE	CKD	DATE
3	ADDED MOTOR STARTER ENCLOSURE	JS / RMK	01/15/99
2	DELETED HEATER SELECTION TABLE	BJH / MP	11/25/97
1	ADDED NEW WIRES FOR REMOTE LUBRICATOR	LD / JS	06/10/97
5	TITLE BLOCK WAS "FLC 2000 WIRING SCHEMATIC" ADDED GA REF. #14579-00, #14580-00	JS	02/27/02
4	ADDED LUBRICATOR NOTE & NEW G.A. # REFERENCE	JS / WS	02/07/00

EB	DEPT.
ABJN	4a

THE DESIGNS AND INFORMATION CONTAINED ON THIS DRAWING OR COPIES REMAIN THE EXCLUSIVE PROPERTY OF DERRICK® CORPORATION BUFFALO, NEW YORK U.S.A. AND ARE NOT TO BE REPRODUCED WITHOUT THE WRITTEN PERMISSION OF DERRICK CORPORATION. THE INFORMATION CONTAINED ON THIS DRAWING SHALL ONLY BE USED BY CUSTOMERS OR PROSPECTS OR THEIR AGENCIES IN THE ARRANGEMENT OR INSTALLATION OF DERRICK EQUIPMENT, OR BY VENDORS IN QUOTING ON OR IN THE SUPPLY OF PARTS OR ASSEMBLIES TO DERRICK, OR BY OTHERS FOR THE SPECIFIC REASON OUTLINED IN THE TRANSMITTAL WHETHER WRITTEN OR VERBAL.

TITLE: FLO-LINE CLEANER™ WIRE SCHEMATIC

DWN RMK | CKD JFS | DATE 2/7/97 | SCALE NTS | REV 5

SHEET SIZE B | Y | F C | DWN | CKD

DRAWING NO. 13320-00

DERRICK® CORPORATION
590 DUKE ROAD BUFFALO, NY 14225 U.S.A.

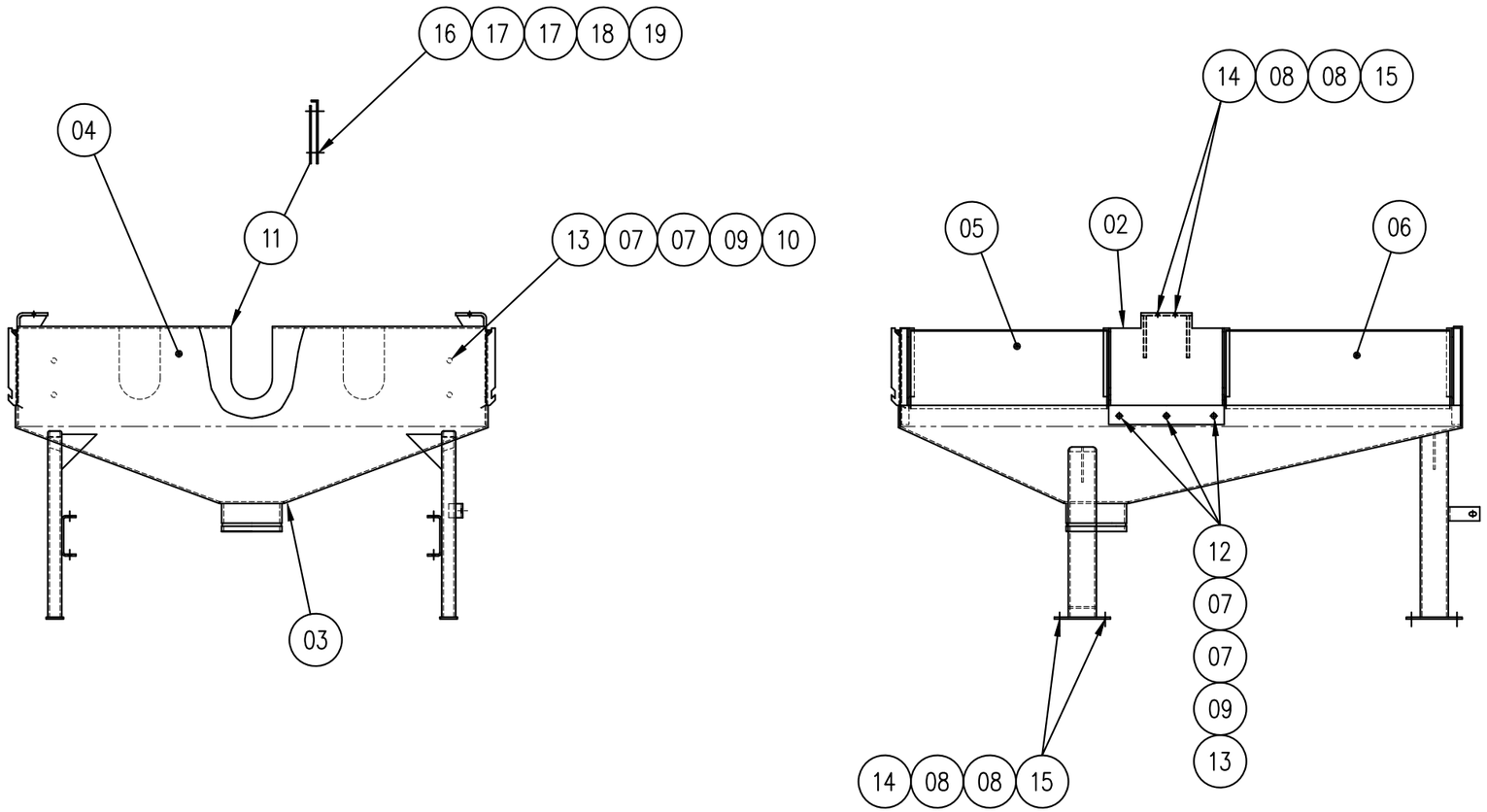

ITEM	REQ'D	PART NUMBER	DESCRIPTION /PART NAME
19	9	NHHS-38-16	3/8-16 HEX NUT
18	9	WLSS-38	3/8 LOCK WASHER
17	18	WFSS-38	3/8 FLAT WASHER
16	9	HXCS-38-16X125	3/8-16 X 1 1/4 HEX HEAD BOLT
15	12	NNLS-50-13	1/2 NYLOC NUT
14	12	HXCS-50-13X150	1/2-13 X 1 1/2 HEX HEAD BOLT
13	10	NNLS-63-11	5/8 NYLOC NUT
12	6	HXCS-63-11X175	5/8-11 X 1 3/4 HEX HEAD BOLT
11	3	12967-00	DESANDER CAP
10	4	HXCS-63-11X200	5/8-11 X 2 HEX HEAD BOLT
09	10	WLSS-63	5/8 LOCK WASHER
08	24	WFSS-50	1/2ø FLAT WASHER
07	20	WFSS-63	5/8ø FLAT WASHER
06	2	13020-02	FORWARD SIDE
05	2	13020-01	REAR SIDE
04	1	13020-29	REAR
03	1	9779-01-027	CYCLONE PAN
02	2	13031-01-003	CYCLONE MOUNT ASSY
01			CYCLONE PAN ASSEMBLY

EB	DEPT.
4P	1abc, 2bce, 4a

REV	CHANGE	CKD	DATE
1	REMOVED ITEM 20- WAS 12991-00 (URETHANE PLUG).	WS CCS	11/04/04

THE DESIGNS AND INFORMATION CONTAINED ON THIS DRAWING OR COPIES REMAIN THE EXCLUSIVE PROPERTY OF DERRICK® CORPORATION BUFFALO, NEW YORK U.S.A. AND ARE NOT TO BE REPRODUCED WITHOUT THE WRITTEN PERMISSION OF DERRICK CORPORATION. THE INFORMATION CONTAINED ON THIS DRAWING SHALL ONLY BE USED BY CUSTOMERS OR PROSPECTS OR THEIR AGENCIES IN THE ARRANGEMENT OR INSTALLATION OF DERRICK EQUIPMENT, OR BY VENDORS IN QUOTING ON OR IN THE SUPPLY OF PARTS OR ASSEMBLIES TO DERRICK, OR BY OTHERS FOR THE SPECIFIC REASON OUTLINED IN THE TRANSMITTAL WHETHER WRITTEN OR VERBAL.

TITLE
PARTS LIST FOR VERTICAL DESILTER
HYDROCYCLONE PAN (09779-00-027)

DWN NVB | CKD | DATE 10/08/97 | SCALE 1=20 | REV 1

SHEET SIZE B | F C Y | DWN BA 05/13/04 | CKD TJS 5/14/04

DRAWING NO. 13244-00-014

DERRICK® CORPORATION
590 DUKE ROAD BUFFALO, NY 14225 U.S.A.

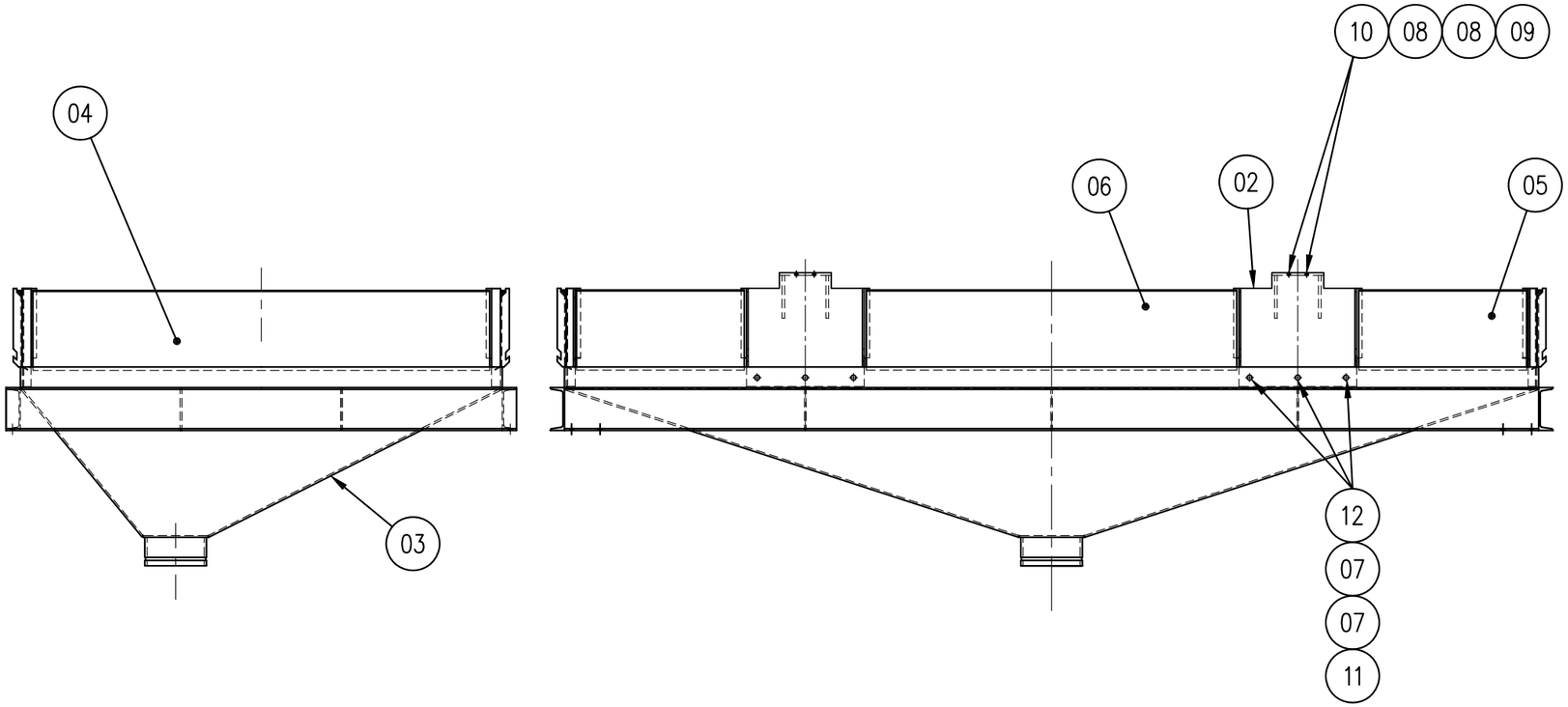

ITEM	REQ'D	PART NUMBER	DESCRIPTION /PART NAME
12	12	HXCS-63-11X175	5/8-11 X 1 3/4 HEX HEAD BOLT
11	12	NNLS-63-11	5/8 NYLOC NUT
10	8	HXCS-50-13X150	1/2-13 X 1 1/2 HEX HEAD BOLT
09	8	NNLS-50-13	1/2 NYLOC NUT
08	16	WFSS-50	1/2ø FLAT WASHER
07	24	WFSS-63	5/8ø FLAT WASHER
06	2	13020-33	DOOR ASSY
05	4	13020-31	DOOR ASSY
04	2	13020-29	DOOR ASSY
03	1	14835-00-001	DESILTER PAN
02	2	13031-01-003	DESILTER MOUNT ASSY
01			DESILTER PAN ASSEMBLY

EB	DEPT.
4P	1abc, 2bce, 4a

REV	CHANGE	CKD	DATE

THE DESIGNS AND INFORMATION CONTAINED ON THIS DRAWING OR COPIES REMAIN THE EXCLUSIVE PROPERTY OF DERRICK® CORPORATION BUFFALO, NEW YORK U.S.A. AND ARE NOT TO BE REPRODUCED WITHOUT THE WRITTEN PERMISSION OF DERRICK CORPORATION. THE INFORMATION CONTAINED ON THIS DRAWING SHALL ONLY BE USED BY CUSTOMERS OR PROSPECTS OR THEIR AGENCIES IN THE ARRANGEMENT OR INSTALLATION OF DERRICK EQUIPMENT, OR BY VENDORS IN QUOTING ON OR IN THE SUPPLY OF PARTS OR ASSEMBLIES TO DERRICK, OR NY OTHERS FOR THE SPECIFIC REASON OUTLINED IN THE TRANSMITTAL WHETHER WRITTEN OR VERBAL.

TITLE
PARTS LIST FOR DESILTER PAN (14835-00-001)

DWN NVB | CKD WS | DATE 2/8/01 | SCALE 1=20 | REV

SHEET SIZE B20 | F C Y | DWN RES 6/25/01 | CKD SB 6/28/01

DRAWING NO. 14841-00-001

DERRICK® CORPORATION
590 DUKE ROAD BUFFALO, NY 14225 U.S.A.

RECOMMENDED THERMAL UNIT SELECTION TABLE FOR DERRICK® SUPPLIED MANUAL STARTERS

DERRICK VIBRATING MACHINES

F, FX, K, KX, L, LX, T, TX MOTORS	575V.A.C.	60Hz	1.5HP	=	SQD-B3.30	or FUR-H19
	460V.A.C.	60Hz	1.5HP	=	SQD-B4.15	or FUR-H21
	230V.A.C.	60Hz	1.5HP	=	SQD-B10.2	or FUR-H26
	215V.A.C.	60Hz	1.5HP	=	SQD-B10.2	or FUR-H27
	440V.A.C.	50Hz	1.5HP	=	SQD-B3.70	or FUR-H19
	380V.A.C.	50Hz	1.5HP	=	SQD-B4.15	or FUR-H21
	220V.A.C.	50Hz	1.5HP	=	SQD-B8.20	or FUR-H26
E, EX, M, MX, SG, SGX MOTORS	575V.A.C.	60Hz	2.5HP	=	SQD-B6.25	or FUR-H24
	460V.A.C.	60Hz	2.5HP	=	SQD-B7.70	or FUR-H26
	230V.A.C.	60Hz	2.5HP	=	SQD-B17.5	or FUR-H32
	215V.A.C.	60Hz	2.5HP	=	SQD-B17.5	or FUR-H32
	440V.A.C.	50Hz	2.5HP	=	SQD-B6.90	or FUR-H24
	380V.A.C.	50Hz	2.5HP	=	SQD-B7.70	or FUR-H26
	220V.A.C.	50Hz	2.5HP	=	SQD-B14.0	or FUR-H31
R, RX MOTORS	575V.A.C.	60Hz	3.0HP	=	SQD-B6.90	or FUR-H25
	460V.A.C.	60Hz	3.0HP	=	SQD-B9.10	or FUR-H27
	230V.A.C.	60Hz	3.0HP	=	SQD-B19.5	or FUR-H33
	215V.A.C.	60Hz	3.0HP	=	SQD-B19.5	or FUR-H34
	440V.A.C.	50Hz	3.0HP	=	SQD-B7.70	or FUR-H26
	380V.A.C.	50Hz	3.0HP	=	SQD-B9.10	or FUR-H27
	220V.A.C.	50Hz	3.0HP	=	SQD-B17.5	or FUR-H32
A, C, N MOTORS	575V.A.C.	60Hz	5.0HP	=	SQD-B11.5	or FUR-H29
	460V.A.C.	60Hz	5.0HP	=	SQD-B15.5	or FUR-H32
	230V.A.C.	60Hz	5.0HP	=	SQD-B36.0	or FUR-H40
	215V.A.C.	60Hz	5.0HP	=	SQD-B36.0	or FUR-H40
	440V.A.C.	50Hz	5.0HP	=	SQD-B12.8	or FUR-H30
	380V.A.C.	50Hz	5.0HP	=	SQD-B15.5	or FUR-H32
	220V.A.C.	50Hz	5.0HP	=	SQD-B32.0	or FUR-H37

DERRICK DEGASSER

575V.A.C.	60Hz	5.0HP	=	SQD-B8.20	or FUR-H28
460V.A.C.	60Hz	5.0HP	=	SQD-B10.2	or FUR-H30
230V.A.C.	60Hz	5.0HP	=	SQD-B19.5	or FUR-H38
415V.A.C.	50Hz	5.0HP	=	SQD-B11.5	or FUR-H31
380V.A.C.	50Hz	5.0HP	=	SQD-B19.5	or FUR-H32

DERRICK PRIMER

575V.A.C.	60Hz	1.5HP	=	SQD-B3.30
460V.A.C.	60Hz	1.5HP	=	SQD-B3.70
230V.A.C.	60Hz	1.5HP	=	SQD-B8.20
380V.A.C.	50Hz	1.5HP	=	SQD-B3.70

NOTE: IF MOTOR VOLTAGE OR HORSE POWER IS NOT LISTED, CONTACT ENGINEERING DEPARTMENT.
**** FOR MAGNETIC STARTER OVERLOAD INFO REFER TO THE ELECTRICAL PARTS LIST THAT IS FOUND ON THE EQUIPMENTS GENERAL ARRANGEMENT DRAWING.

Derrick®, Flo-Line®, FLC 2000™, Flo-Line Scalper™, Pyramid®, Sandwich Screens®, DE-1000™, Hi-G™, Vacu-Flo™, GBG™, PMD™, PWP™, SWG™, DC™, DF™, DX™, and GS™, are trademarks of Derrick Corporation.

SECTION 9 - INSTALLATION AND MAINTENANCE LOG

PURPOSE

This section should be used by operating and maintenance personnel to record historical information gathered during the installation and operation of the Derrick equipment. If properly kept, the log will be useful for altering maintenance intervals and intercepting trends that may indicate the need for changing operating procedures. Each entry in the log should be dated for future reference and tracking. If required, additional pages may be added to the log by copying a blank page or simply inserting ruled paper at the rear of the section.

INSTALLATION AND MAINTENANCE NOTES

CERTIFICATE OF ORIGIN

Equipment:	High Speed Vibratory Screening Equipment
Model:	Series: C, E, EX, F, FX, J, K, KX, L, LX, M, MX, RX SG, SGX, T, TX, W
Characteristics:	0-600VAC, 50/60Hz, 3PH

Derrick Corporation acknowledges that the above set-forth product is manufactured in the United States of America as of the date of this certificate. This certificate is governed by the applicable purchase order terms in effect at the time of Derrick Corporation's original shipment of the referenced product.

Date: 29-December-2011

Signature: Jennifer J. Polanowski
Derrick Corporation

CERTIFICATE OF QUALITY

Equipment:	High Speed Vibratory Screening Equipment
Model:	Series: C, E, EX, F, FX, L, LX, M, MX, RX, SG, SGX, T, TX, W
Characteristics:	0-600VAC, 50/60Hz, 3PH

Derrick Corporation acknowledges that the above set-forth product conformed to the requirements for the applicable purchase order at the time of its original shipment by Derrick Corporation in that all construction materials and components were new and unused, were manufactured for this product, and that it was free of any known defects as to their design, material and workmanship. This certificate is governed by the applicable purchase order terms in effect at the time of Derrick Corporation's original shipment of the referenced product.

Jennifer J. Polanowski

Date: 29-December-2011

Signature: Jennifer J. Polanowski
Derrick Corporation

SHIPPING FINAL INSPECTION AND RUN TEST CERTIFICATE

Equipment:	High Speed Vibratory Screening Equipment
Model:	Series: C, E, EX, F, FX, J, K, KX, L, LX, M, MX, RX, SG, SGX, T, TX, W
Characteristics:	0-600VAC, 50/60Hz, 3PH

The product listed above was inspected and found to be in conformance with Derrick Corporation's internal coating, run test, and assembly inspection documents that were required for the type of equipment manufactured in accordance with the Derrick quality system. This certificate is governed by the applicable purchase order terms in effect at the time of Derrick Corporation's original shipment of the referenced product.

Date: 29-December-2011

Signature: Jennifer J. Polanowski
Derrick Corporation

Doc # PE-S-036-02-06
Date: 20-January-2011

CERTIFICATE OF CONFORMANCE

Equipment:	Mining & Oilfield equipment manufactured specifically for Hazardous Location Areas including but not limited to: Flo-Line® Cleaners, Flo-Line® Primers, Agitators, Vacu-Flo™ Degassers, DE-1000™ Centrifuges, Centrifugal Pumps, Flo-Line Scalpers™ etc.
Name and Address of Manufacturer:	Derrick Corporation 590 Duke Road Buffalo, NY 14225
Rating and Principle Characteristics:	0-600 VAC, 50/60Hz, 3PH
Model / Type Ref:	Various
Additional Information:	None

This product was found to be in conformance with:

U.L. listed for hazardous locations Class I, Division 1, Groups C & D, which is similar to equipment marked as II 2G Ex d IIB T3 for Zone 1 areas. Assembled in accordance with National Electrical Code (NEC) – articles 500 thru 506 (hazardous locations) where applicable.

Additionally:

Derrick Corporation certifies that the above-listed equipment for the referenced order conformed to the requirements of the specified order at the time of its original shipment by Derrick Corporation in that: all construction materials and components were new and unused, manufactured for this equipment, and that the goods were free of any known defects as to their design, material and workmanship. This certificate is governed by the applicable purchase order terms in effect at the time of Derrick Corporation's original shipment of the above-listed equipment.

DERRICK CORP. JAN 19 2012 ENGINEERING DEPT.

Signature: For Thomas Silvestrini